NESPA
TILED SPAS

Instructional Booklet

for

BEDFORD SPRINGS

2800 Richter Ave. Suite C, Oroville, CA 95965 • **voice:** (530)534-9910
fax: (530)534-9915 • **email:** sales@tiledspas.com • **website:** www.tiledspas.com

RECOMMENDED MAINTENANCE

Please Note:

These are only recommended guidelines to care for a Nespa all tiled spa. Local codes may require additional procedures, therefore consult with a pool professional that is LA county Health Department ceritfied for more information on local codes and requirements.

SPA SURFACE

Your spa tile is acid resistant and frost-proof. The Tile does not absorb germs or algae. Tile does not stain and is very easy to clean. Color does not fade or loose its luster. All grouts are epoxy based and are extremely durable. To remove scum line use soft nylon brush and small amounts of biodegradable soaps. Do not use abrasive brushes or chemicals.

MAINTENANCE

A. CHEMICALS:

1) **It is important to maintain a chlorine residual of 2 PPM in the spa. That residual can be provided by chlorine or bromine.**
2) **It is recommended to use Bromine or dichlor (granular) forms of chlorine. If bromine Tabs are used we suggest floating or inline dispenser.**
3) **Never use acid to lower Ph in the tile spa.**
4) **Never use trichlor chlorine (1" or 3") tablets in the Nespa spas.**
5) **Never place tablets in skimmer basket.**

B. DRAINING THE SPA:

1) **It is recommended to drain the spa at least once every 2 months depending on bath load and water clarity.**
2) **The spa should be drained through valve exiting re-circulation pump in the spa equipment room or sump pump.**
3) **Note: Use caution to drain spa in the winter months or rainy season when water table is at its highest. It is possible for the spa to float due to hydraulic pressure from surrounding water table. We advise that you consult with your local spa specialist prior to draining the spa.**

C. SPA EQUIPMENT:

1) **Clean filter cartridge at least once every month, or when needed; i.e., if water clarity does not improve after several days.**
2) **Keep area free and clear from leaves and debris build-up.**
3) **Keep area free and clear from flooding.**

D. SPA LIGHT:

1) **Spa light has to be on GFCI circuit. It is controlled at spa side with ON/OFF.**

E. TILE SERVICING:

1) **Contact manufacture when servicing tile or grout. @ (530) 534-9910**

ZONE	REV	PG.	REVISION DESCRIPTION	DATE
ALL	0	ALL	INITIAL DESIGN	08-08-06
ALL	0	ALL	Added PipingRuns and Details	08-16-06
ALL	0	ALL	Added CO-ED SPA AND EQ	08-20-06
ALL	0	7&13	Added EQ DETAIL AND RENDER	08-23-06
ALL	0	ALL	Added Cold Plunge Sections and 4" Slope to all Spas	08-24-06
ALL	0	ALL	Added Additional Sections to all Spas	08-29-06

NESPA ENTERPRISES INC.
2800 Richter Ave. Suite C
Oroville, CA 95966
Office: (530) 534-9910
Fax: (530) 534-9915
E-Mail: sales@tiledspas.com
Web Site: www.tiledspas.com

ALL DIMENSIONS SUBJECT TO 1/4" TOLERANCES

BRADFORD SPRINGS HOTEL

SPAS

SIZE	9/5/2006	DWG NO.	BEDFORD SPRINGS	REV 0
MISC.		SHEET	TITLE PAGE	

SPA CONSTRUCTION NOTES:

OCCUPANCY:
BATHERS WOMEN'S WHIRLPOOL = 13 BATHERS
BATHERS WOMEN'S PLUNGE = 3 BATHERS
BATHERS MEN'S WHIRLPOOL = 6 BATHERS
BATHERS MEN'S PLUNGE = 3 BATHERS

PLUMBING:
1. ALL FRESH WATER AND WASTE WATER CONNECTIONS AND PIPING SHALL BE INSTALLED BY A LICENSED PLUMBER.
2. HOSE BIB(S), WITH VACUUM BREAKERS REQUIRED, SHALL BE A MAXIMUM SEPARATION DISTANCE OF 150 FEET, FOR CLEANING OF ALL PARTS OF THE POOL AND DECK. LOCATION AND INSTALLATION BY PLUMBING CONTRACTOR.
3. EXPOSED PIPING: ALL PIPING IN OR AROUND POOLS TO BE SCHEDULE 40 PVC. ALL PIPING IN FILTER ROOM TO BE SCHEDULE 40 UNLESS OTHERWISE INDICATED.
4. CONCEALED PIPING: NSF APPROVED SCHEDULE 40 PVC, AND BURIED.
5. VALVES AND FITTINGS: NSF APPROVED PVC OR AS OTHERWISE INDICATED AS RECOMMENDED TO WORK WITH PIPING AS LISTED ABOVE.

ELECTRICAL NOTES:
1. ALL ELECTRICAL WORK SHALL BE PERFORMED BY A LICENSED ELECTRICIAN.
2. ALL WIRING TO CONFORM TO THE NATIONAL ELECTRICAL CODE (1999 EDITION) AND STATE ELECTRICAL CODES.
3. THE POOL SHALL BE GROUNDED AND LIGHTS, IF ANY INSTALLED ACCORDING TO MANUFACTURERS PRINTED INSTRUCTIONS.
4. LIGHTING OF AT LEAST 36 LUMENS/S.F. OF POOL SURFACE AREA AND DECK AREA REQUIRED FOR POOL AREA USE. LIGHTING LOCATION AND INSTALLATION PROVIDED BY ELECTRICAL CONTRACTOR.
5. GFI RECEPTACLES SHALL BE LOCATED AROUND THE POOL(S) PERIMETER TO PROVIDE ADEQUATE ACCESS FOR POOL CLEANING EQUIPMENT.
6. ALL WIRING AND GROUNDING TO CONFORM TO THE NEC 680 BUILDING CODE (CURRENT EDITION) AND STATE ELECTRICAL CODES.
7. EQUIPMENT ROOM SHALL BE LIGHTED TO PROVIDE 30 FOOT CANDLE ILLUMINATION AT FLOOR.
8. PUMP ON/OFF DISCONNECT SWITCHES FOR EACH PUMP. FOLLOW Penn. STATE ELECTRICAL CODES.

POOL BONDING REQUIREMENTS:
1. THE FOLLOWING PARTS SHALL BE BONDED TOGETHER AND CONNECTED TO THE COMMON BONDING GRID.
   A. ALL THE METALLIC PARTS OF THE POOL STRUCTURE INCLUDING COPYING STONES, DECK, PERMANENT PLAY STRUCTURES, PERMANENT EXERCISE STRUCTURES.
   B. ALL METAL FITTINGS WITHIN OR ATTACHED TO THE POOL STRUCTURE
   C. METAL PARTS ASSOCIATED WITH THE POOL WATER CIRCULATING SYSTEM, INCLUDING PUMPS, FILTERS, AND HEATERS.
   D. METAL PARTS ASSOCIATED WITH POOL COVERS
   E. METAL SHEATHED CABLES AND RACEWAYS, METAL PIPING AND ALL FIXED METAL PARTS WITHIN 5 FEET HORIZONTALLY OF INSIDE WALLS OF POOL AND WITHIN 12 FEET ABOVE MAXIMUM WATER LEVEL OF POOL.
   F. METAL PARTS ASSOCIATED WITH OBSERVATION STANDS, TOWERS, PLATFORMS, AND DIVING STRUCTURES.
2. BONDING CONDUCTORS SHALL BE MINIMUM #8 SOLID COPPER, INSULATED E.C. SHALL COORDINATE APPROVED CONNECTOR TYPE AND METHOD WITH LOCAL ELECTRICAL AND/ OR POOL INSPECTOR.
3. SPECIFIC MANUFACTURER'S INSTRUCTIONS REGARDING BONDING OR GROUNDING OF POOL EQUIPMENT, WHETHER INDICATED HEREIN OR NOT, SHALL BE STRICTLY FOLLOWED.
4. THE COMMON BONDING GRID SHALL NOT BE CONNECTED TO ANY ELECTRICAL DISTRIBUTION EQUIPMENT.
5. ANY PARTS IN ADDITION TO THOSE DESCRIBED HEREIN THAT ARE INDICATED BY POOL CONTRACTOR OR LOCAL INSPECTION AUTORITY SHALL BE BONDED TO THE COMMON BONDING GRID WITH NO ADDITIONAL COSTS INCURRED BY THE OWNER.
6. THE ELECTRICAL CONTRACTOR SHALL COORDINATE BONDING WITH GENERAL CONTRACTOR.

PIPING NOTES:

1. ALL PIPING SHALL BE IN ACCORDANCE WITH THE STATE AND COUNTY DEPARTMENT OF PUBLIC HEALTH REGULATIONS.
2. ALL PIPING DESIGNED FOR 6' PER SECOND MAXIMUM SUCTION, 10' PER SECOND MAXIMUM PRESSURE AND 3' PER SECOND MAXIMUM GRAVITY.
3. MAIN DRAIN PIPING SHALL NOT EXCEED A RECIRCULATION RATE OF 6' PER SECOND.
4. ALL DRAWINGS ARE INTENDED FOR SCHEMATIC USE ONLY!! FINAL LOCATIONS SHALL BE FIELD VERIFIED WITH ALL OTHER TRADES BY CONTRACTOR.
5. CONTRACTOR SHALL COORDINATE ALL WORK WITH ARCHITECTURAL, MECHANICAL, ELECTRICAL AND STRUCTURAL DRAWINGS.
6. ALL PVC PLUMBING MUST BE NSF LISTED FOR POTABLE WATER AND MEET ASTM B 1785 STANDARDS.
7. A FLOWMETER SHALL BE PROVIDED IN THE RECIRCULATION PUMP DISCHARGE LINE. INSTALL ON A STRAIGHT LENGTH OF PIPE AT A DISTANCE OF AT LEAST 10 PIPE DIAMETERS DOWNSTREAM AND 5 PIPE DIAMETERS UPSTREAM FROM ANY VALVE, ELBOW OR OTHER SOURCE OF TURBULENCE.

DEPTH MARKERS

A. DEPTH MARKERS SHALL BE 6" X 6" INLAYED TILES AT WATERLINE AND ON POOL DECK. THE WALL IN A MAXIMUM 25 FOOT INTERVALS. "NO DIVING" ON DECK AS REQUIRED.
B. POOL DEPTH MARKERS ON THE FACE OF THE WALL SHALL BE LOCATED AT OR ABOVE THE WATER SURFACE OF THE SWIMMING POOL ENCLOSURE IN PLAIN VIEW TO BATHER.
C. DEPTH MARKERS SHALL BE OF COLOR CONTRASTING WITH BACKGROUND.

SPA USE SIGN / SAFETY SIGN

(SAFETY SIGN SHALL INCLUDE BUT NOT LIMITED TO THE FOLLOWING MESSAGE)

1. RISK OF FETUS INJURY-HOT WATER EXPOSURE LIMITATIONS VARY FROM PERSON TO PERSON. PREGNANT WOMEN AND SMALL CHILDREN SHOULD NOT USE SPA PRIOR TO MEDICAL CONSULTATION.
2. RISK OF DROWNING- PERSONS SUFFERING FROM HEART DISEASE, HIGH OR LOW BLOOD PRESSURE AND OTHER HEALTH PROBLEMS SHOULD NOT ENTER SPA WITHOUT PRIOR MEDICAL CONSULTATION AND PERMISSION FROM THEIR DOCTOR.
3. RISK OF DROWNING - DO NOT USE THE SPA WHILE UNDER THE INFLUENCE OF ALCOHOL, NARCARCOTICS, OR OTHER DRUGS THAT CAUSE SLEEPINESS, DROWSINESS OR RAISE/LOWER BLOOD PRESSURE.
4. RISK OF CHILD DROWNING- UNSUPERVISED USE OF THE SPA BY CHILDREN IS PROHIBITED.
5. RISK OF INJURY - BEFORE ENTERING, CHECK SPA WATER TEMPERATURE. DO NOT USE THE SPA IF THE TEMPERATURE IS ABOVE 104" F (40°C).
6. RISK OF DROWNING-USE CAUTION WHEN BATHING ALONE. OVEREXPOSURE TO HOTWATER MAY CAUSE NAUSEA, DIZZINESS AND FAINTING. LOWER WATER TEMPERATURES ARE RECOMMENDED FOR EXTENDED USE (EXCEEDING 10-15 MIN.) AND FOR YOUNG CHILDREN.
7. RISK OF INJURY - ENTER AND EXIT SLOWLY.
8. RISK OF INJURY - KEEP ALL BREAKABLE OBJECTS OUT OF SPA AREA.
9. RISK OF SHOCK - NEVER PLACE ELECTRICAL APPLIANCES (PHONE, RADIO, TV, ETC.) WITHIN FIVE FEET (5'-0") OF THE SPA.
10. RISK OF SHOCK - THE SPA SHALL NOT BE OPERATED DURING SERVERE WEATHER CONDITIONS, I.E. ELECTRICAL STORMS, TORNADOES, ETC.
11. SECURE THE FACILITY AGAINST UNAUTHORIZED ACCESS.
12. RISK OF DROWNING - DO NOT ALLOW THE USE OF OR OPERATE SPA IF THE SUCTION OUTLET COVER IS MISSING, DAMAGED OR LOOSE.

SAFETY SIGNAGE

1. FILTER ROOM DOOR TO HAVE A SIGN LOCATED ON THE OUTSIDE SAYING "CAUTION - CHLORINE HAZARD AREA! UNAUTHORIZED PERSONS KEEP OUT. CHLORINE CAUSES BURNS, SEVERE EYE HAZARD, & OTHER INJURIES WHICH MAY BE FATAL IF INHALED."
2. POOL RULES SIGNS LISTING RULES DETERMINED BY OWNER LOCATED IN EACH CHANGING ROOM AREA
3. MAIN POOL ALL AREAS THAT ARE 5'-0" DEEP OR LESS SHALL HAVE NO DIVING SYMBOL OR LETTERS AND THE WATER DEPTH, (4" NUMBERS/LETTERS) MARKINGS TO OCCUR AT A MIN. OF EVERY 25' BETWEEN AND WHERE EVERY DEPTH CHANGE OCCURS PER CODE & IN COMPLIANCE W/ CODE. DEPTH MARKINGS TO BE PAINTED WITH IN 18" OF WATERS EDGE. FINISH SHOULD BE NON- SKID PAINT.

DON'T LET THE BONDING AND GROUNDING REQUIREMENTS OF POOLS MAKE YOU FEEL LIKE YOU'RE IN OVER YOUR HEAD ALL CODE REFERENCES ARE BASED ON THE 2005 NEC. THE GROUNDING AND BONDING REQUIREMENTS IN THIS COLUMN APPLY TO SOLIDLY GROUNDED SYSTEMS THAT OPERATE AT NOT MORE THAN 600V, INCLUDING 120/240V, 120/208V, AND 277/480V.WHAT COMES TO MIND WHEN YOU THINK OF POOLS, SPAS, HOT TUBS, AND SIMILAR INSTALLATIONS? MOST PEOPLE WOULD SAY FUN AND RELAXATION. BUT THE PERSON TRYING TO PROPERLY GROUND AND BOND THESE INSTALLATIONS IS MORE LIKELY TO SAY CONFUSION AND FRUSTRATION. WHY? BECAUSE OF A PHRASE KNOWN AS EQUIPOTENTIAL BONDING, WHICH IS A TERM SOME INSTALLERS AREN'T FAMILIAR WITH.TO HELP US CLEAR UP THE CONFUSION, LET'S RECAP THREE BASIC CONCEPTS:

1. WHEN YOU GROUND, YOU CONNECT SOMETHING TO THE EARTH. THINK OF THIS AS EARTHING.
2. WHEN YOU BOND, YOU CREATE A CONDUCTIVE PATH BETWEEN METALLIC OBJECTS.
3. BONDING IS THE METHOD BY WHICH YOU CREATE A LOW-IMPEDANCE PATH FOR FAULT CURRENT TO FLOW.THE PURPOSE OF EQUIPOTENTIAL BONDING IS TO BRING METALLIC OBJECTS TO THE SAME POTENTIAL, THUS REDUCING THE SHOCK HAZARD. THIS IS OBVIOUSLY AN IMPORTANT CONSIDERATION FOR PEOPLE IMMERSED IN A CONTAINER OF WATER.

THE INTENTION OF EQUIPOTENTIAL BONDING IS TO REDUCE EARTH VOLTAGE GRADIENTS IN THE AREA AROUND A PERMANENTLY INSTALLED POOL OR SIMILAR INSTALLATION BY THE USE OF A COMMON BONDING GRID PER 680.26(B) AND (C) .EQUIPOTENTIAL BONDING IS NOT INTENDED TO PROVIDE A LOW-IMPEDANCE GROUND-FAULT CURRENT PATH TO THE SOURCE (WHICH WOULD ASSIST IN CLEARING A GROUND FAULT) AS REQUIRED BY 250.4(A)(3). IT ALSO HAS NOTHING TO DO WITH CREATING A PATH FOR FAULT CURRENT. THEREFORE, THE 8 AWG OR LARGER SOLID COPPER EQUIPOTENTIAL BONDING CONDUCTOR REQUIRED BY 680.26(C) ISN'T REQUIRED TO EXTEND TO (OR ATTACH TO) ANY PANELBOARD, SERVICE EQUIPMENT, OR ELECTRODE.

IN ADDITION TO EQUIPOTENTIAL BONDING, THE CODE REQUIRES ANY WIRING METHOD USED FOR EQUIPMENT ASSOCIATED WITH A POOL, SPA, OR HOT TUB TO INCLUDE AN INSULATED COPPER EQUIPMENT GROUNDING (BONDING) CONDUCTOR. YOU MUST SIZE THIS CONDUCTOR PER 250.122, BUT IT CAN'T BE SMALLER THAN 12 AWG COPPER. VARIOUS OTHER REQUIREMENTS APPLY, DEPENDING ON THE TYPE OF RACEWAY YOU USE. THESE REQUIREMENTS ALL WORK TOWARD PROVIDING AN EFFECTIVE GROUND-FAULT CURRENT PATH.

POOL LIGHTS. WHEN WIRING LUMINAIRES IN A POOL, THE GOAL IS TO LIGHT UP THE POOL, NOT ITS OCCUPANTS. THIS IS WHY BRANCH-CIRCUIT CONDUCTORS FOR AN UNDERWATER LUMINAIRE MUST CONTAIN AN INSULATED COPPER EQUIPMENT GROUNDING (BONDING) CONDUCTOR SIZED PER TABLE 250.122. IN NO CASE CAN THIS CONDUCTOR BE SMALLER THAN 12 AWG (FIG. 1).YOU MUST NOT SPLICE THE EQUIPMENT GROUNDING (BONDING) CONDUCTOR FOR THE UNDERWATER LUMINAIRE [680.23(F)(2)], UNLESS ONE OF TWO CONDITIONS EXISTS (FIG. 2 ON PAGE 46):

1. MORE THAN ONE UNDERWATER LUMINAIRE IS SUPPLIED BY THE SAME BRANCH CIRCUIT. IF SO, THE EQUIPMENT GROUNDING (BONDING) CONDUCTOR CAN TERMINATE AT A LISTED POOL JUNCTION BOX THAT MEETS THE REQUIREMENTS OF 680.24(A).
2. THE EQUIPMENT GROUNDING (BONDING) CONDUCTOR TERMINATES AT THE GROUNDING TERMINAL OF A LISTED POOL TRANSFORMER, GFCI, CLOCK SWITCH, OR MANUAL SNAP SWITCH THAT IS LOCATED BETWEEN THE PANELBOARD AND A JUNCTION BOX CONNECTED TO THE CONDUIT THAT EXTENDS DIRECTLY TO THE UNDERWATER LUMINAIRE.

THE BRANCH-CIRCUIT CONDUCTORS FOR THE UNDERWATER LUMINAIRE MUST NOT OCCUPY RACEWAYS, BOXES, OR ENCLOSURES CONTAINING OTHER CONDUCTORS ON THE LOAD SIDE OF A GFCI OR TRANSFORMER — UNLESS ONE OF THE FOLLOWING CONDITIONS EXISTS:

1. THE OTHER CONDUCTORS ARE GFCI PROTECTED.
2. THE OTHER CONDUCTORS ARE GROUNDING (BONDING) CONDUCTORS.
3. THE OTHER CONDUCTORS SUPPLY A FEED-THROUGH TYPE GFCI.
4. THE OTHER CONDUCTORS ARE IN A PANELBOARD.JUNCTION BOXES. THE JUNCTION BOX (DECK BOX) THAT CONNECTS DIRECTLY TO AN UNDERWATER PERMANENTLY INSTALLED POOL, OUTDOOR SPA, OR OUTDOOR HOT TUB LUMINAIRE FORMING SHELL MUST BE LISTED AS A SWIMMING POOL JUNCTION BOX AND EQUIPPED WITH THREADED ENTRIES OR A NONMETALLIC HUB [680.24]. IT ALSO MUST BE CONSTRUCTED OF COPPER, BRASS, OR CORROSION-RESISTANT MATERIAL APPROVED BY THE AUTHORITY HAVING JURISDICTION (AHJ). YOU MUST PROVIDE ELECTRICAL CONTINUITY BETWEEN ALL METAL CONDUIT AND THE GROUNDING (BONDING) TERMINALS WITHIN THE JUNCTION BOX.

YOU ALSO MUST ENSURE THE JUNCTION BOX HAS AT LEAST ONE MORE GROUNDING (BONDING) TERMINAL THAN THE NUMBER OF CONDUIT ENTRIES [680.24(D)]. TYPICALLY, THERE ARE FOUR GROUNDING (BONDING) TERMINALS IN THE JUNCTION BOX AND THREE CONDUIT ENTRIES. FINALLY, YOU MUST PROVIDE A STRAIN RELIEF AT THE ENCLOSURE WHERE YOU TERMINATE THE FLEXIBLE CORD OF AN UNDERWATER LUMINAIRE [680.24(E)].

BONDING METAL PARTS TO THE EQUIPOTENTIAL BONDING GRID. ENSURE THE FOLLOWING FIVE PARTS OF A PERMANENTLY INSTALLED POOL, OUTDOOR SPA, OR OUTDOOR HOT TUB ARE BONDED TOGETHER AND TO THE EQUIPOTENTIAL BONDING GRID.

1. ALL METALLIC PARTS OF REINFORCING METAL NOT ENCAPSULATED WITH A NONCONDUCTIVE COMPOUND. THE USUAL STEEL TIE-WIRES THAT SECURE REBAR TOGETHER ARE CONSIDERED SUITABLE FOR BONDING THE REINFORCING STEEL TOGETHER (FIG. 3 ON PAGE 46). WHERE CONDUCTIVE REINFORCING STEEL OF THE PERMANENTLY INSTALLED POOL, OUTDOOR SPA, OR OUTDOOR HOT TUB SHELL AND DECK IS NOT AVAILABLE, YOU MUST PROVIDE AN ALTERNATIVE MEANS IN ACCORDANCE WITH 680.26(C) TO ELIMINATE VOLTAGE GRADIENTS THAT WOULD OTHERWISE BE PROVIDED BY UNENCAPSULATED, BONDED REINFORCING STEEL.
2. ALL METAL FORMING SHELLS FOR UNDERWATER WET-NICHE LUMINAIRES.
3. METAL FITTINGS WITHIN OR ATTACHED TO THE PERMANENTLY INSTALLED POOL, OUTDOOR SPA, OR OUTDOOR HOT TUB STRUCTURE, SUCH AS LADDERS AND HANDRAILS.
4. METAL PARTS OF ELECTRICAL EQUIPMENT ASSOCIATED WITH THE CIRCULATING SYSTEM (WATER HEATERS AND PUMP MOTORS) AND METAL PARTS OF EQUIPMENT ASSOCIATED WITH POOL COVERS.
5. METAL CABLES, METAL RACEWAYS, METAL PIPING, AND ALL FIXED METAL PARTS OF ELECTRICAL EQUIPMENT — EXCEPT THOSE SEPARATED FROM THE POOL BY A PERMANENT BARRIER LOCATED WITHIN: 5 FEET HORIZONTALLY OF THE INSIDE WALLS OF THE PERMANENTLY INSTALLED POOL, OUTDOOR SPA, OR OUTDOOR HOT TUB. 12 FEET ABOVE THE MAXIMUM WATER LEVEL OF THE PERMANENTLY INSTALLED POOL, OUTDOOR SPA, OR OUTDOOR HOT TUB; OR ANY OBSERVATION STANDS, TOWERS, PLATFORMS, OR DIVING STRUCTURES.

THE EQUIPOTENTIAL BONDING GRID. ALL METAL PARTS SPECIFIED IN 680.26(B) MUST BE BONDED TO AN EQUIPOTENTIAL BONDING GRID WITH A SOLID COPPER CONDUCTOR NOT SMALLER THAN 8 AWG. THE TERMINATION OF THE BONDING CONDUCTOR MUST BE MADE BY EXOTHERMIC WELDING, LISTED PRESSURE CONNECTORS, OR LISTED CLAMPS THAT ARE LABELED AS SUITABLE FOR THE PURPOSE. AN EQUIPOTENTIAL BONDING GRID MUST EXTEND UNDER PAVED WALKING SURFACES FOR 3 FEET HORIZONTALLY FROM THE WATER [680.26(C)].

THE EQUIPOTENTIAL BONDING GRID MUST BE FORMED FROM EITHER OR BOTH OF:

1. THE STRUCTURAL REINFORCING STEEL OF A CONCRETE PERMANENTLY INSTALLED POOL, OUTDOOR SPA, OR OUTDOOR HOT TUB, TIED TOGETHER BY THE USUAL STEEL TIE WIRES.
2. THE METAL WALLS OF A PERMANENTLY INSTALLED POOL, OUTDOOR SPA, OR OUTDOOR HOT TUB.

WHAT IF NEITHER OF THESE IS AVAILABLE? WHERE STRUCTURAL REINFORCING STEEL OR THE WALLS OF BOLTED OR WELDED METAL PERMANENTLY INSTALLED POOL, OUTDOOR SPA, OR OUTDOOR HOT TUB STRUCTURES ARE NOT AVAILABLE, YOU MUST CONSTRUCT AN EQUIPOTENTIAL BONDING GRID AS FOLLOWS:

(A) THE EQUIPOTENTIAL GRID CAN BE CONSTRUCTED WITH 8 AWG BARE SOLID COPPER CONDUCTORS THAT ARE BONDED TO EACH OTHER AT ALL POINTS OF CROSSING BY EXOTHERMIC WELDING, LISTED PRESSURE CONNECTORS OF THE SET SCREW OR COMPRESSION TYPE, LISTED CLAMPS, OR OTHER LISTED FITTINGS [250.8].
(B) THE EQUIPOTENTIAL BONDING GRID MUST COVER THE CONTOUR OF THE PERMANENTLY INSTALLED POOL, OUTDOOR SPA, OR OUTDOOR HOT TUB, AND DECK EXTENDING 3 FEET HORIZONTALLY FROM THE WATER. THE EQUIPOTENTIAL BONDING GRID MUST BE ARRANGED IN A 1-FOOT BY 1-FOOT NETWORK OF 8 AWG CONDUCTORS, WITH A TOLERANCE OF 4 INCHES.

ALL EQUIPOTENTIAL BONDING TERMINATIONS MUST BE BY EXOTHERMIC WELDING, LISTED PRESSURE CONNECTORS OF THE SET SCREW OR COMPRESSION TYPE, LISTED CLAMPS, OR OTHER LISTED FITTINGS [250.8].

DISPELLING COMMON MYTHS. LET'S GO BACK FOR A MOMENT TO A FREQUENTLY MISAPPLIED TERM: GROUNDING. ONE OF THE MYTHS ABOUT GROUNDING (EARTHING) IS THAT IT REDUCES SHOCK HAZARDS BY BRINGING EVERYTHING TO GROUND POTENTIAL. BECAUSE THE EARTH IS NOT OF UNIFORM CONDUCTIVITY, THAT CAN HARDLY BE THE CASE. ANOTHER MYTH IS THAT GROUNDING (EARTHING) PROVIDES A COMMON REFERENCE POINT. THIS ALSO DEFIES LOGIC.

WHAT ABOUT THAT COMMON REFERENCE? IF GROUND (EARTH) IS NOT IT, WHAT IS? YOU CAN ESTABLISH A COMMON REFERENCE BY CONSTRUCTING A BONDING GRID, NOT AN EARTHING CONNECTION. CONNECT YOUR BONDING PATH TO THE GROUNDING GRID, AND ALL OF THE OBJECTS ARE AT AN EQUAL POTENTIAL.

WHEN YOU HAVE EQUAL POTENTIAL, THEN BY DEFINITION YOU DO NOT HAVE A VOLTAGE DIFFERENCE. WITHOUT A VOLTAGE DIFFERENCE, THERE CAN BE NO CURRENT FLOW. THUS, YOU USE AN EQUIPOTENTIAL BONDING SYSTEM — NOT A GROUNDING SYSTEM — TO REDUCE SHOCK HAZARDS.

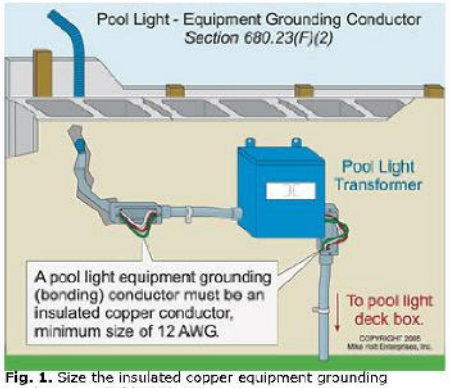

Fig. 1. Size the insulated copper equipment grounding conductor per Table 250.122.

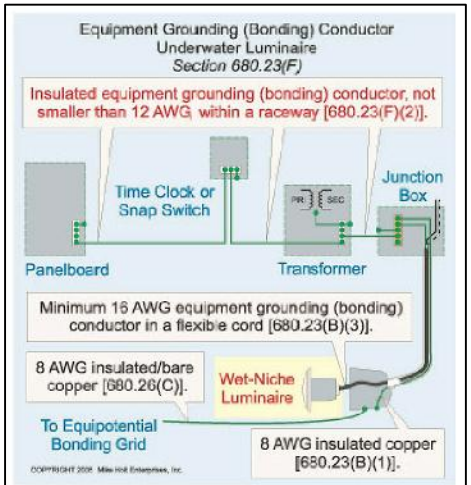

Fig. 2. The junction box serving the luminaire must be listed as a swimming pool junction box.

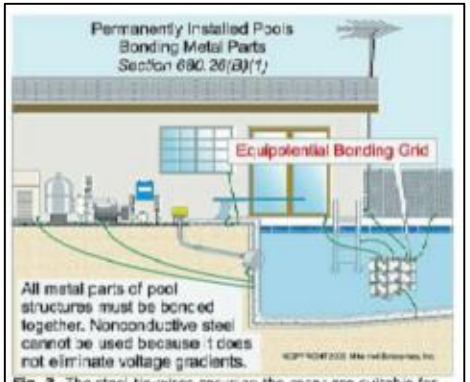

Fig. 3. The steel tie-wires securing the rebar are suitable for bonding the reinforcing steel.

NESPA ENTERPRISES INC.
2800 Richter Ave. Suite C
Oroville, CA 95966
Office: (530) 534-9910
Fax: (530) 534-9915
E-Mail: sales@tiledspas.com
Web Site: www.tiledspas.com

SIZE	9/24/2006	DWG NO.	BEDFORD SPRINGS	REV 0
MISC.		SHEET	NOTES	

Manufacture Duties:

Nespa to supply the follow spas and equipment to curbside jobsite.
Off loading of spas and equipment by others.

Woman's Spa:

Construct custom Nespa all tiled spa. Woman's whirlpool to be 20' x 7'-6"x 42" deep interior dimension. Spa OD dimension shall be 21' x 8'-6"wide x 51.5" tall. Two skimmers boxed as per plan. Interior tile to be Dal Keystone 2x2 slip resistant type with matte finish. Bisazza waterline and accent. Spa to be free standing and self supporting. Grout to be acid resistant frost free epoxy type. Factory preplumb Woman's whirlpool with 20 hydrotherapy jets, 5 heat/filter returns, two 12" x 12" main drains, All suctions anti-vortex type. Water fill and sensor fittings installed, two NSF approved simmers and equalizers (4). All plumbing is factory PSI tested prior to shipping. Install in Woman's spa, American Products SS. Light niche with 1" hub. Provide 100 watt , 120 volt Spa Bright light with 50 ft. cord.

Circulation Pump	(1) Pentair Whisperflo 3hp, 230v,1ph 20 amp
Booster Pump	(2) Pentair Whisperflo 3hp, 230v,1ph,20 amp,
Filtration	(1) Pentair Clean and Clear 420 sq.ft. cartridge filter
Heater	(1) Pentair 400,000 btu Natural Gas heater,power assisted ventilation, Exit venting by others
Water Level	(1) Levelor 110 Controller w/sensor, 1" actuator valve
Chem Controls	(1) CP250 ORP/PH Chemical Controller
Ozone System	(1) Clearwater CD Ozone generator and mixing manifold
Light	(1) 100 watt ,120 volt GFCI protected light.
Handrails	(2) SR Smith stainless steel handrails
Fittings:	(20) Jets, two 12x12 Main drains 8 intakes, waterfill, reflection pipe
Flow Meters	(1) Each
Pressure/Vac Gauges	(1) Each

Men's Spa:

Construct custom Nespa all tiled spa for Men. Octagon or round 7'6" diameter. Spa ID Depth to be 40". Spa OD height to be 49" tall. One skimmer boxed as per plan. Handrail cup anchor installed. Interior tile to be Dal Keystone 2x2 slip resistant type with matte finish. Spa to be free standing and self supporting. Depth markers installed at waterline.

Pre-plumb spa in rigid sch 40 pvc. Install 10 hydrotherapy jets, (2) 12" X 12" main drains, (4) high flow UL approved Waterway 208 gpm suction inlets, (2) equalizer suctions, 3 filter returns at elevations 8" to 16" below mid point of skimmer, water fill fitting, jet air venturi pipe, and NSF approved Hayward skimmer. All plumbing is factory PSI tested prior to shipping. For Men's spa install American Products Light niche with 1" hub. provide 100 watt ,120 volt Spa Bright light with 50 ft. cord.

Circulation Pump	(1) Pentair Whisperflo 2hp, 230v,1ph 20 amp
Booster Pump	(1) Pentair Whisperflo 3hp, 230v,1ph,20 amp,
Filtration	(1) Pentair Clean and Clear 320 sq.ft. cartridge filter
Heater	(1) Pentair 400,000 btu Natural Gas heater,power assisted ventilation, Exit venting by others
Water Level	(1) Levelor 110 Controller w/sensor, 1" actuator valve
Chem Controls	(1) CP250 ORP/PH Chemical Controller
Ozone System	(1) Clearwater CD Ozone generator and mixing manifold
Light	(1) 100 watt ,120 volt GFCI protected light.
Handrails	(1) SR Smith stainless steel handrails
Fittings:	(8) Jets, two 9x9 Main drains 6 intakes, waterfill, reflection pipe
Flow Meters	(1) Each
Pressure/Vac Gauges	(1) Each

Woman's Plunge Spa:

Construct custom Nespa all tiled cold pool. Woman's Plunge to be approximately 7' x 7'. One skimmer boxed as per plan. Interior tile to be Dal Keystone 2x2 slip resistant type with matte finish. Spa to be free standing and self supporting. Rail cup anchor installed in spa. Preplumb commercial spa with 2 Hydro-air 10-5100 hydrotherapy jets, dual 9" x 9" main drain with one recirculation split suction and in each main drain box. Commercial skimmer installed.

In the Woman's plunge pool, install American Products Light niche with 1" hub. provide 100 watt ,120 volt Spa Bright light with 50 ft. cord.

Circulation Pump	(1) Pentair Whisperflo 1.5hp, 230v,1ph 20 amp
Filtration	(1) Pentair Clean and Clear 200 sq.ft. cartridge filter
Water Level	(1) Levelor 110 Controller w/sensor, 1" actuator valve
Chem Controls	(1) CP250 ORP/PH Chemical Controller
Ozone System	(1) Clearwater CD Ozone generator and mixing manifold
Light	(1) 100 watt ,120 volt GFCI protected light.
Handrail	(1) SR Smith stainless steel handrails
Fittings:	(2) 9x9 Main drains 4 intakes, waterfill, reflection pipe
Flow Meters	(1) Each
Pressure/Vac Gauges	(1) Each

Men's Plunge:

Construct custom Nespa all tiled cold pool. Men's Plunge to be approximately 7' x 7'. One skimmer boxed as per plan. Interior tile to be Dal Keystone 2x2 slip resistant type with matte finish. Spa to be free standing and self supporting. Rail cup anchor installed in spa. Pre-plumb commercial spa with 2 Hydro-air 10-5100 hydrotherapy jets, dual 9" x 9" main drain with one recirculation split suction and in each main drain box. Commercial skimmer installed.

In Men's plunge pool, install American Products Light niche with 1" hub. provide 100 watt ,120 volt Spa Bright light with 50 ft. cord.

Circulation Pump	(1) Pentair Whisperflo 1.5hp, 230v,1ph 20 amp
Filtration	(1) Pentair Clean and Clear 200 sq.ft. cartridge filter
Water Level	(1) Levelor 110 Controller w/sensor, 1" actuator valve
Chem Controls	(1) CP250 ORP/PH Chemical Controller
Ozone System	(1) Clearwater CD Ozone generator and mixing manifold
Light	(1) 100 watt ,120 volt GFCI protected light.
Handrail	(1) SR Smith stainless steel handrails
Fittings:	(2) 9x9 Main drains 4 intakes, waterfill, reflection pipe
Flow Meters	(1) Each
Pressure/Vac Gauges	(1) Each

Installation of spa is provided by others. Others to provide, mechanical equipment location, electrical service, water, heater venting and plumbing connections. These utilities and facilities must also be in conformance with local Building and Health Dept. Codes. Health Department approvals, Building and/or Operating permits; State, or Local Engineering permits, taxes or other permits or authorization, if required, are the responsibility and expense of the purchaser. The determination of necessity for approvals, licenses, or permits is also the responsibility of the purchaser.

NESPA
NESPA ENTERPRISES INC.
2800 Richter Ave. Suite C
Oroville, CA 95966
Office: (530) 534-9910
Fax: (530) 534-9915
E-Mail: sales@tiledspas.com
Web Site: www.tiledspas.com

SIZE	9/26/2006	DWG NO.	BEDFORD SPRINGS	REV 0
MISC.			SHEET	MFGR. NOTES

SECTION -SWIMMING POOL WATER CHEMISTRY CONTROL

1.01 SUMMARY

A. A CHEMICAL AUTOMATION SYSTEM shall be supplied for continuous monitoring of water chemistry and for automatic control of the active sanitizer and pH levels in the swimming pool or spa.

B. The system shall be a CHEMTROL® 250 DIGITAL CONTROLLER of current design and production model manufactured by SANTA BARBARA CONTROL SYSTEMS of Santa Barbara, California or a technically equal system certified by the specifying agent as capable of providing equal performance for all operating functions.
C. Exceptions to the specifications shall be described in detail together with a list of ten (10) similar operating systems of same model and manufacture, with the name, address and telephone number of operating personnel.

1.02 SPECIFICATIONS

A. STANDARD SPECIFICATIONS

1. The controller shall be microprocessor based and shall feature separate digital readouts for ORP and pH. All instrumentation shall be enclosed in a watertight non-metallic cabinet with a clear window cover. All operating controls, calibration adjustments and safety alarm settings shall be accessible from the front panel.

2. The control system shall automatically activate the appropriate chemical feeders in order to maintain the Oxidation-Reduction Potential (ORP) of the Free Active Sanitizer level within +/- 10 millivolts (mV) and the pH within +/- 0.1 of the setpoints selected by the operator. Setpoint selection shall be by direct dialing on scales calibrated in mV of ORP and in pH units.

3. The control system shall include the following feed modes: off, manual, automatic and proportional. The feed rate in the proportional zone shall be adjustable by the changing the bandwidth of the zone from 1% to 100% of the setpoint value.

4. The face panel shall feature two LED digital readouts for mV of ORP and for pH units. Calibration of the pH display shall be adjustable from the front panel, using a standard chemical test kit for pH. ORP requires no calibration.

5. Audible, visual and remote alarms shall be activated by high/ low pH or sanitizer conditions and by the overfeed safety timers. All alarm settings shall be adjustable from the front panel. An interlock jumper shall prevent sanitizer feeding if the pH is below 7.0 or above 8.0.

6. All electronics shall be mounted on a single enclosed, plug-in PC board and shall be coated with a corrosion-proof coating. The sanitizer and pH sensors shall be potentiometric. The sanitizer sensor shall be a sealed combination oxidation-reduction potential (ORP) electrode with a platinum ring having a minimum area of 0.5 cm2. The pH sensor shall be a sealed combination glass electrode.

B. OPTIONS

1. OPTION FCA: The ORP and pH sensors shall be mounted in a see-through flow cell with a clear cover, pre-assembled with a water spigot and two (2) ball valves.

C. WARRANTY

1. The controller electronics shall be covered by a standard manufacturer warranty of five (5) years. Special extensions of more limited warranties shall not be considered acceptable. All sensors will be covered by a standard one (1) year warranty. Other parts shall be covered by their own manufacturer's warranty. 2. The manufacturer shall supply a complete instruction, operating and maintenance manual.

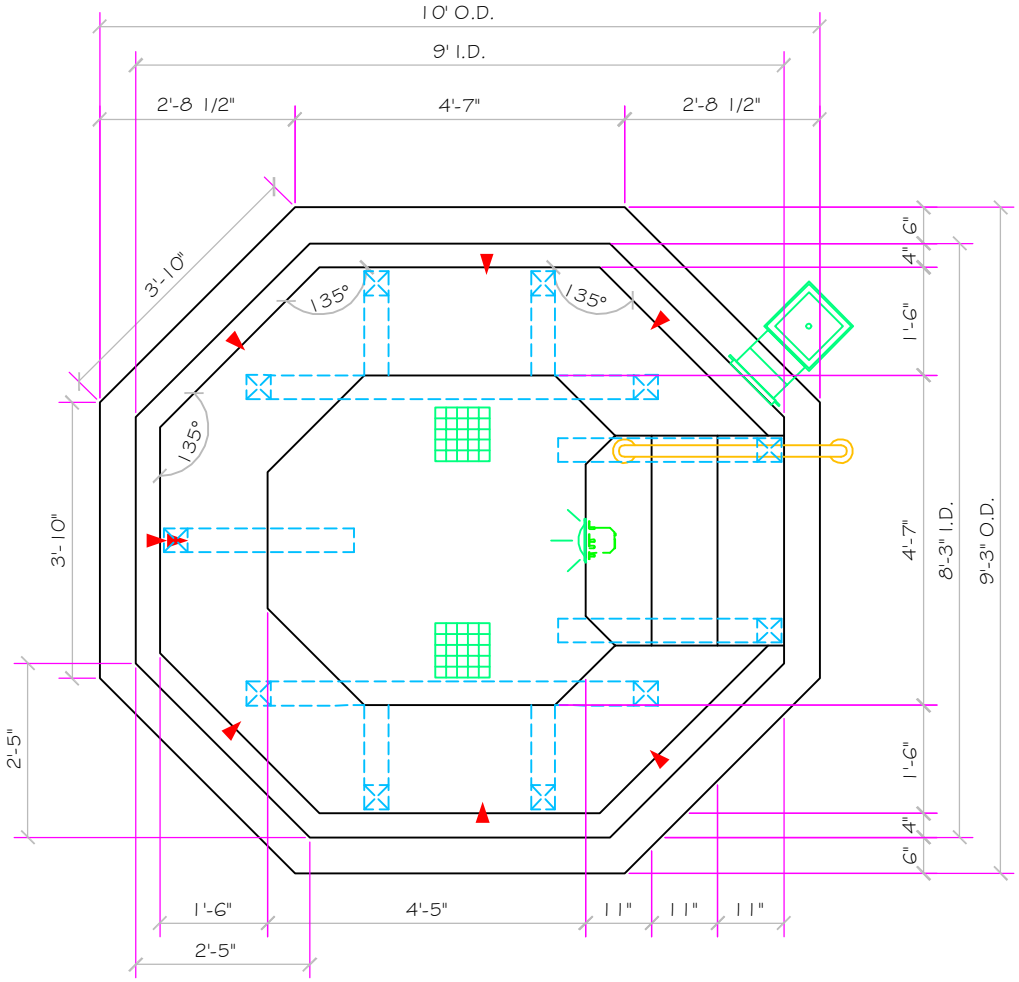

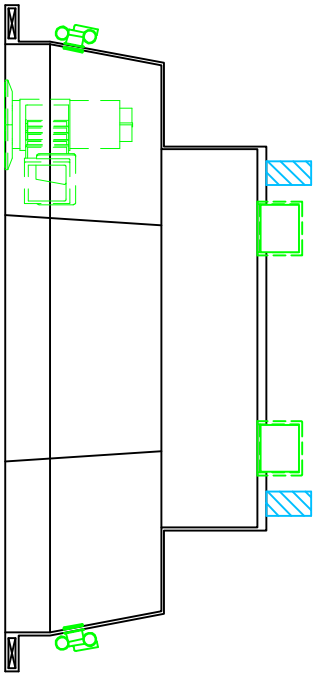

SPECIFICATIONS	
DRY WEIGHT:	2000 LBS.
TOTAL WEIGHT:	11416 LBS.
WATER:	1129 GAL.
VOLUME:	151 Cu.Ft.
WEIGHT:	9416 LBS.
SURFACE AREA:	63 SQ. FT.
IAPMO#:	1138
FDA#:	2030305

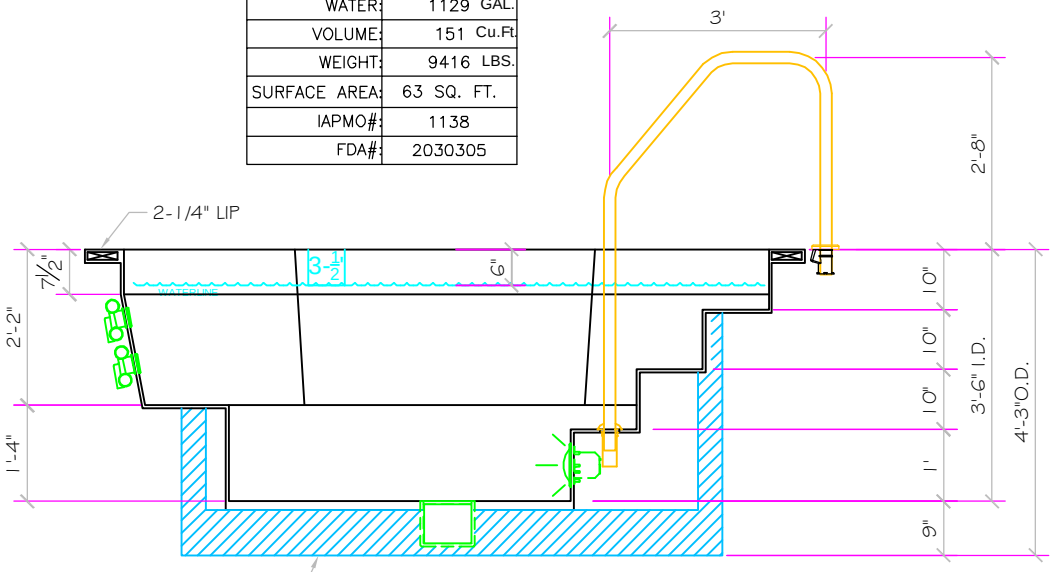

SKIDS MANUFACTURED BY NESPA TILED SPAS ARE INTEGRAL PART OF SPA

	SIZE	DWG TYPE	DWG NO.	REV
NESPA TILED SPAS	A	SD4 Mens	BEDFORD SPRINGS	4
	SCALE 3/8" = 1'	DATE 9/24/2006	SHEET PAGE 1	

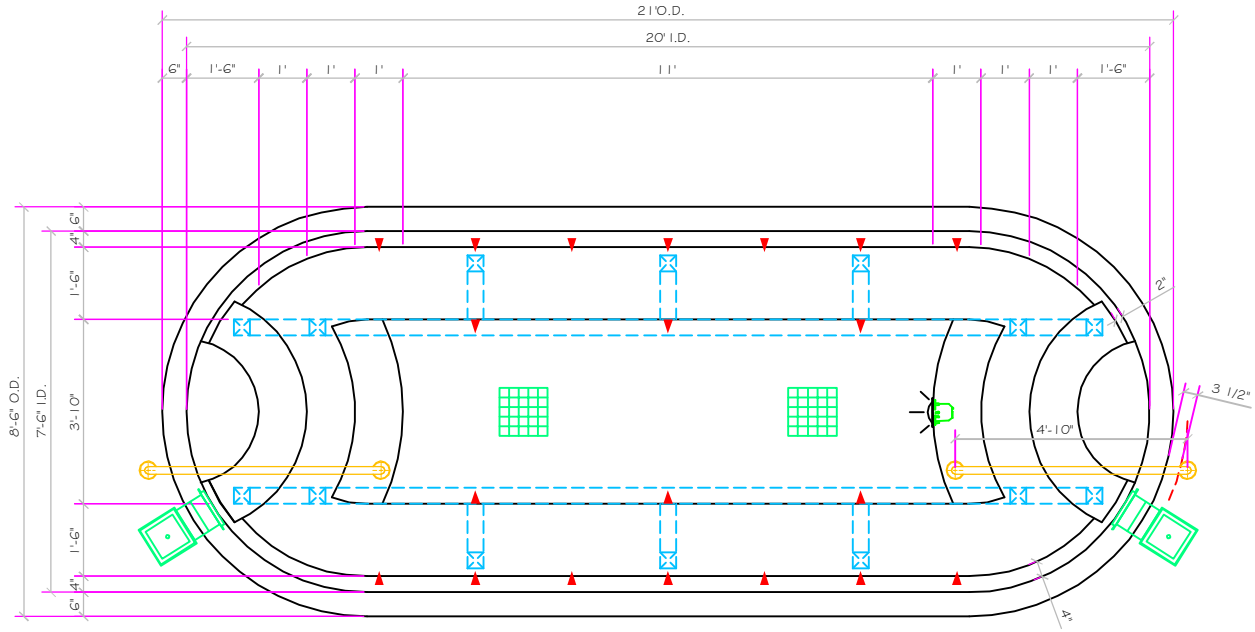

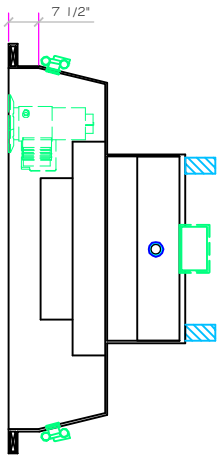

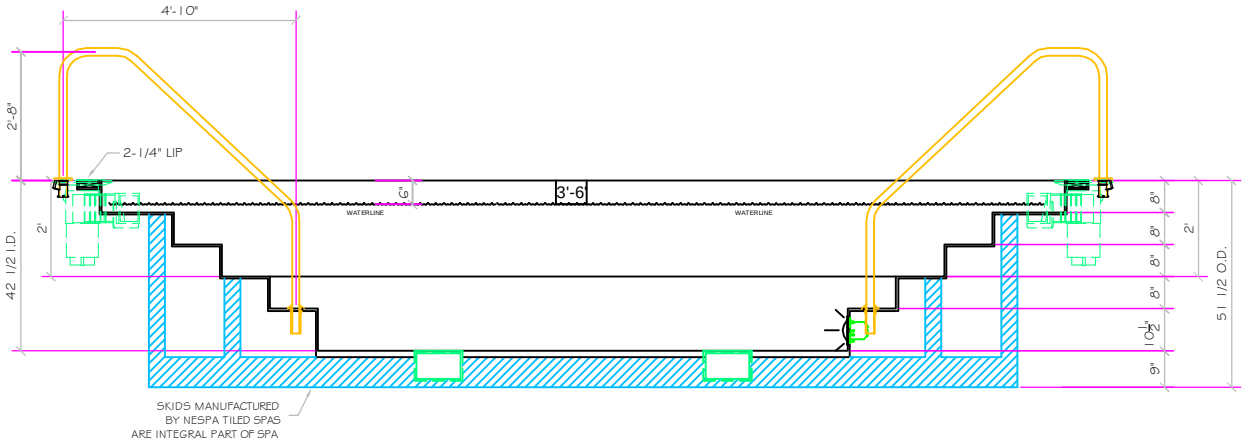

SPECIFICATIONS	
DRY WEIGHT:	4000 LBS.
TOTAL WEIGHT:	23831 LBS.
WATER:	2379 GAL.
VOLUME:	318 Cu.Ft.
WEIGHT:	19831 LBS.
SURFACE AREA:	131 SQ. FT.
IAPMO#:	1138
FDA#:	2030305

NESPA TILED SPAS

SIZE	DWG TYPE	DWG NO.	REV
A	SD3 Womens	BEDFORD SPRINGS	3
SCALE CUSTOM	DATE 9/24/2006	SHEET PAGE 2	

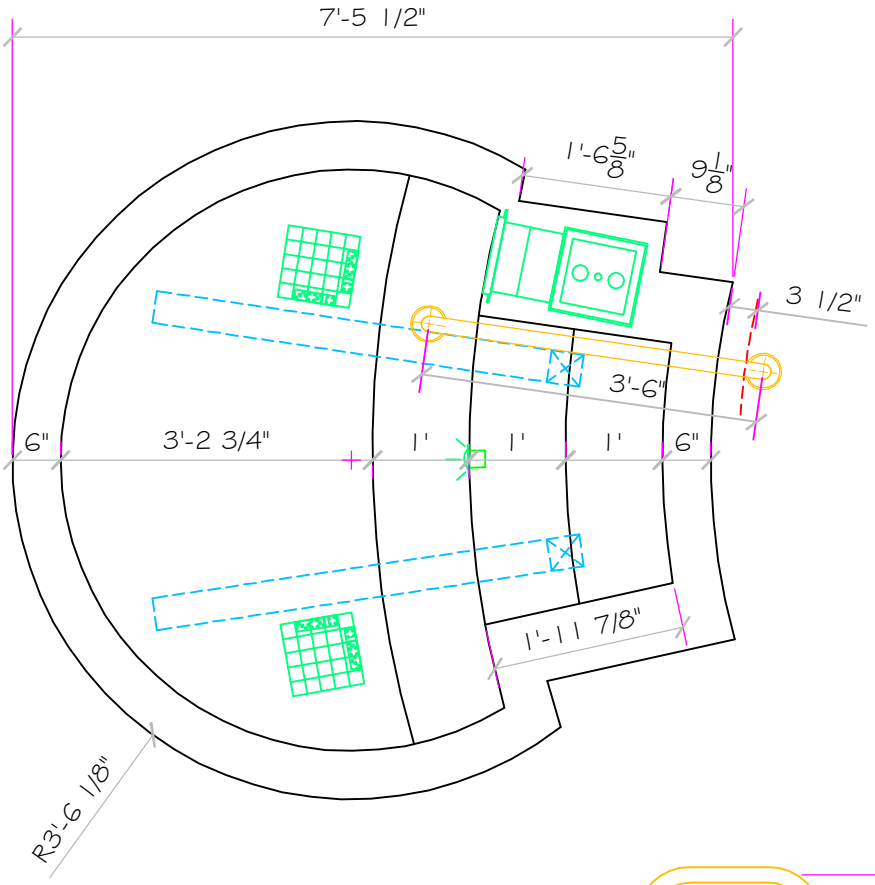

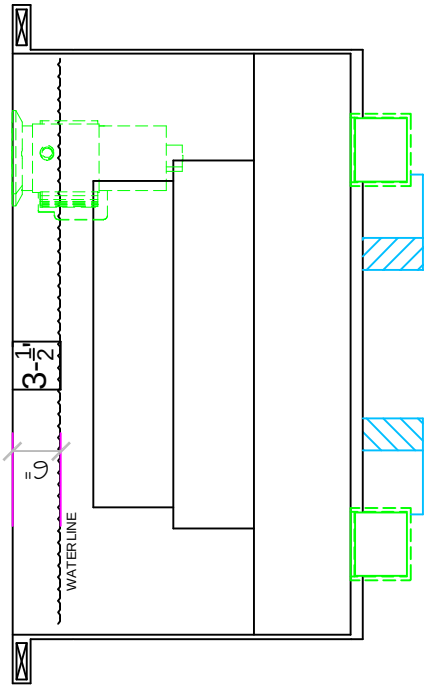

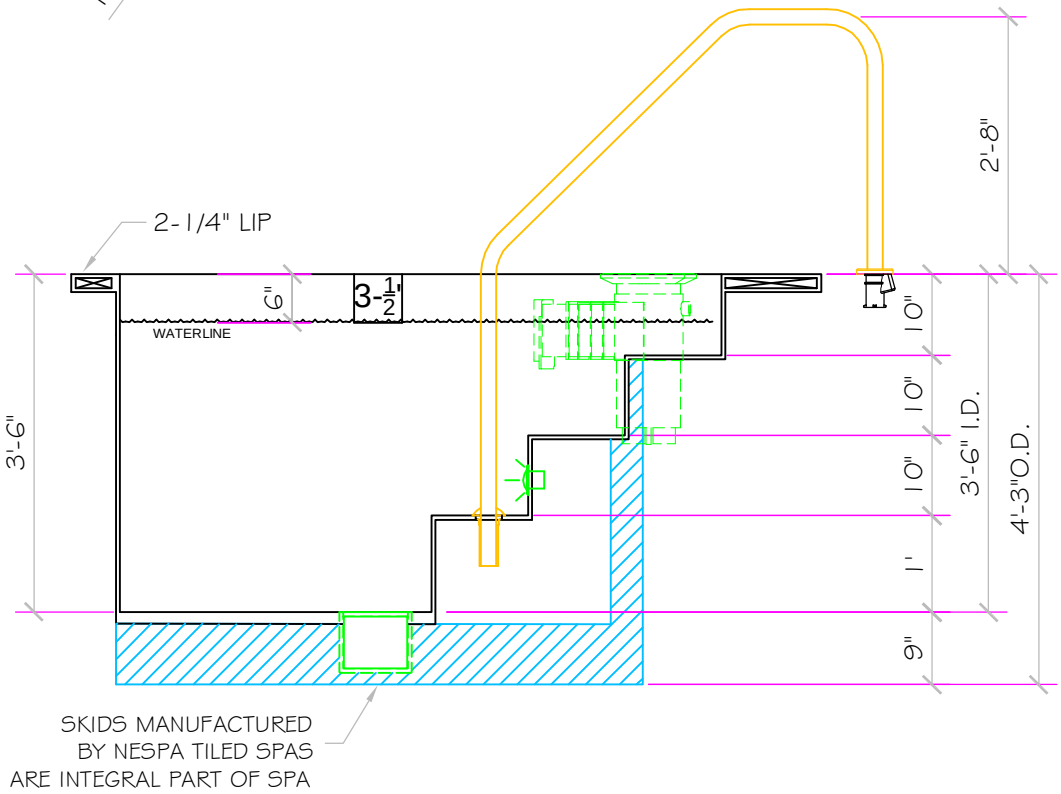

SPECIFICATIONS	
DRY WEIGHT:	1500 LBS.
TOTAL WEIGHT:	6052 LBS.
WATER:	546 GAL.
VOLUME:	73 Cu.Ft.
WEIGHT:	4552 LBS.
SURFACE AREA:	27.7 SQ. FT.
IAPMO#:	1138
FDA#:	2030305

SIZE	DWG TYPE	DWG NO.	REV
A	SD5MensCoolDip	BEDFORD SPRINGS	5
SCALE 129/256" = 1'	DATE 9/24/2006	SHEET PAGE 3	

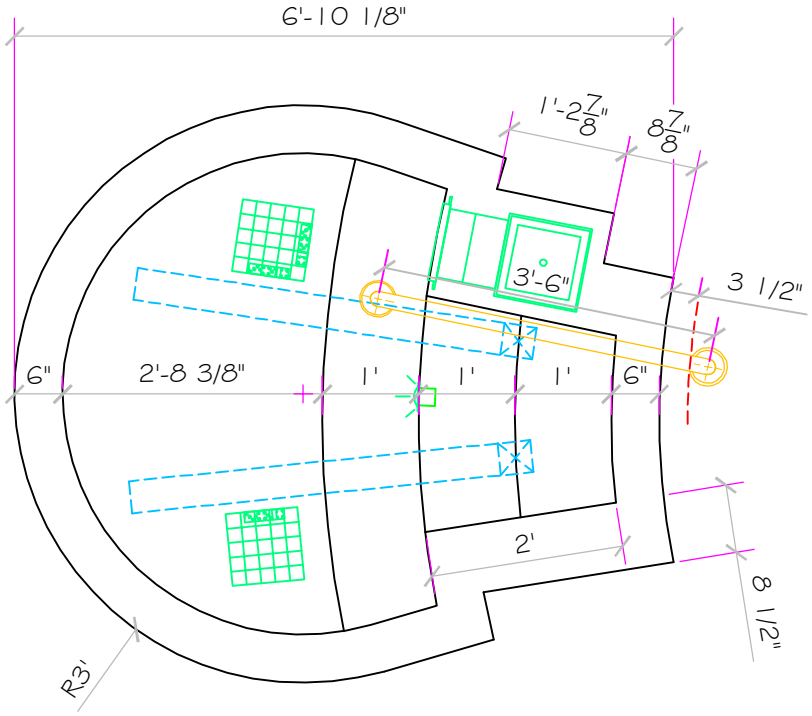

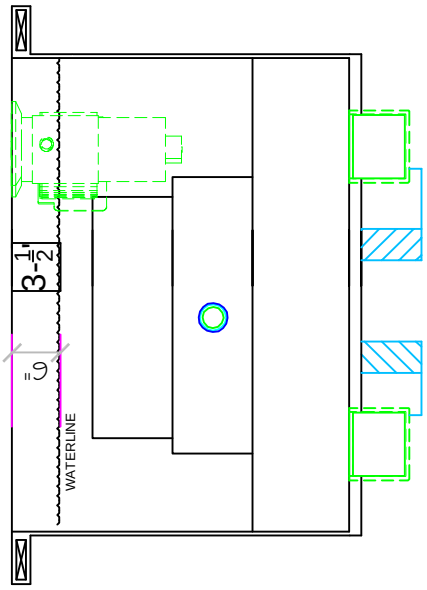

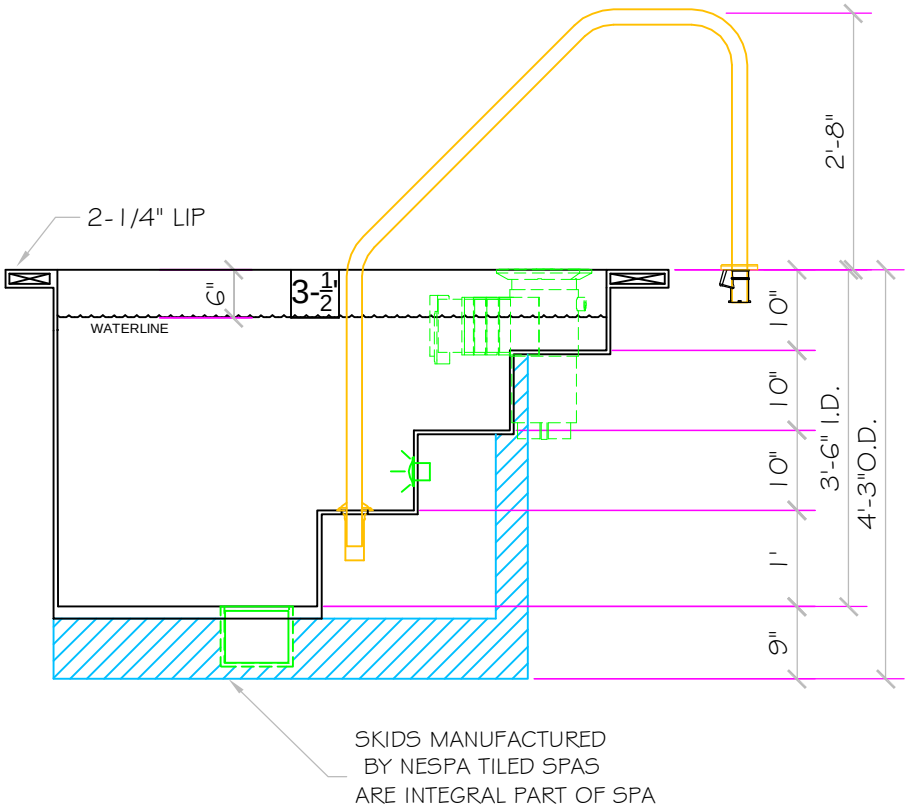

SPECIFICATIONS	
DRY WEIGHT:	1500 LBS.
TOTAL WEIGHT:	4805 LBS.
WATER:	396 GAL.
VOLUME:	53 Cu.Ft.
WEIGHT:	3305 LBS.
SURFACE AREA:	20.2 SQ. FT.
IAPMO#:	1138
FDA#:	2030305

	SIZE	DWG TYPE	DWG NO.	REV
NESPA TILED SPAS	A	SD4WomensCoolDip	BEDFORD SPRINGS	4
	SCALE 1/2" = 1'	DATE 9/24/2006	SHEET PAGE 4	

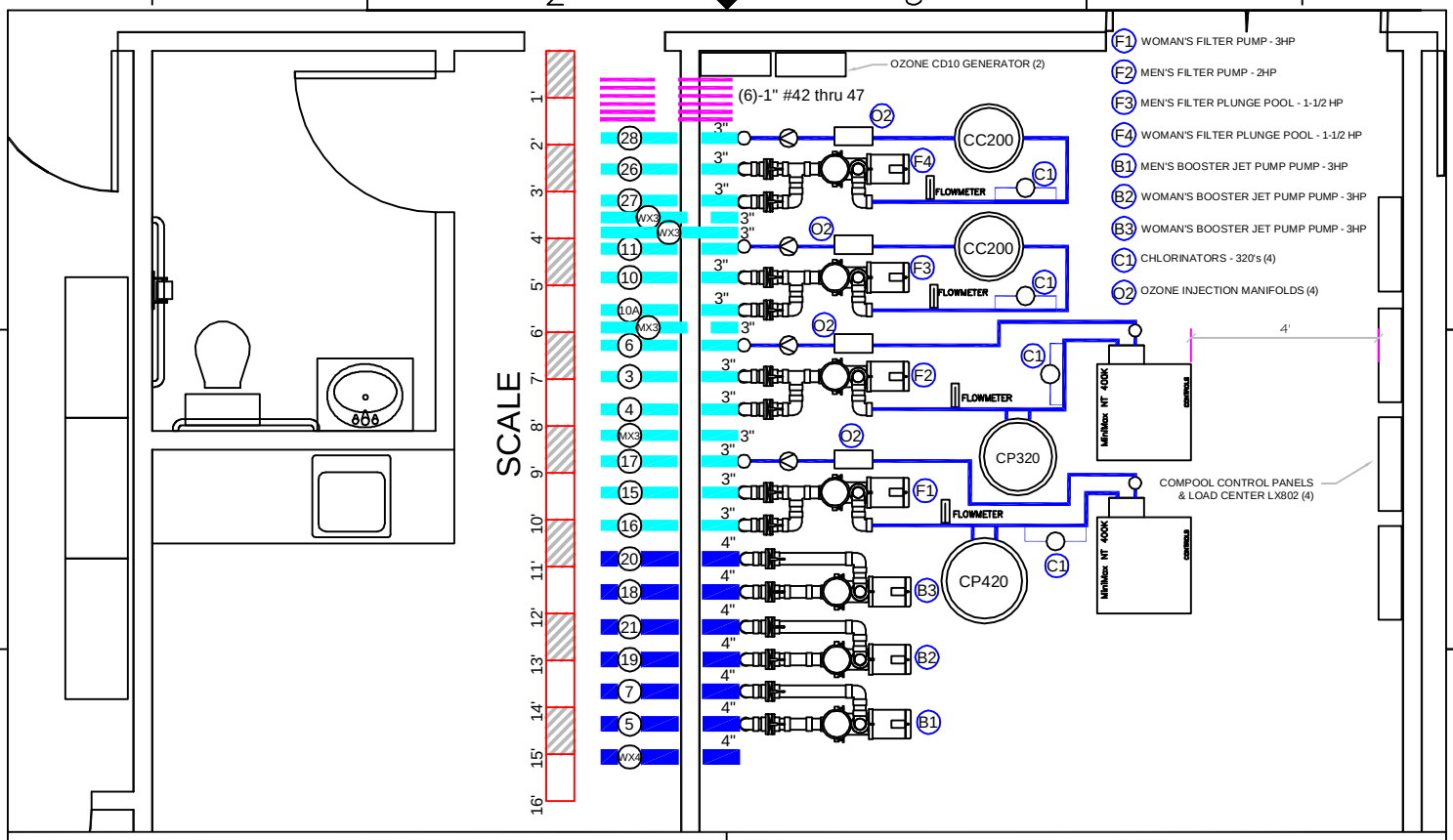

TRENCH DETAIL

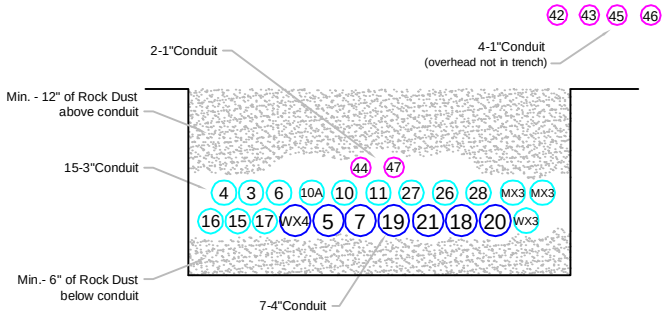

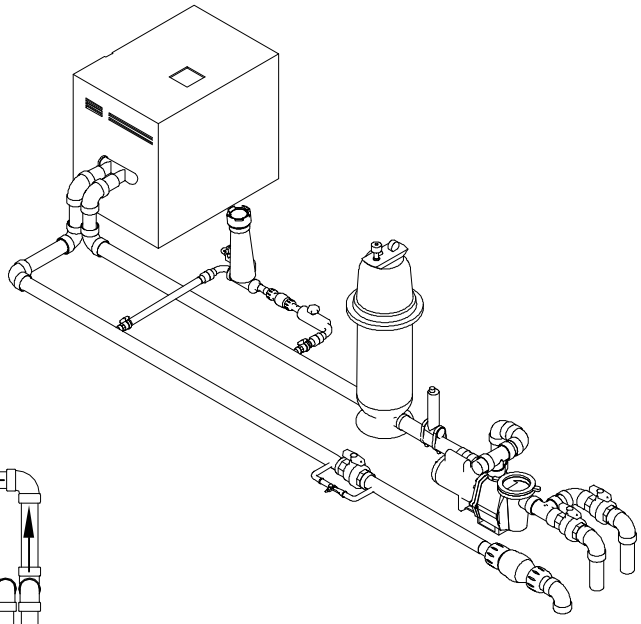

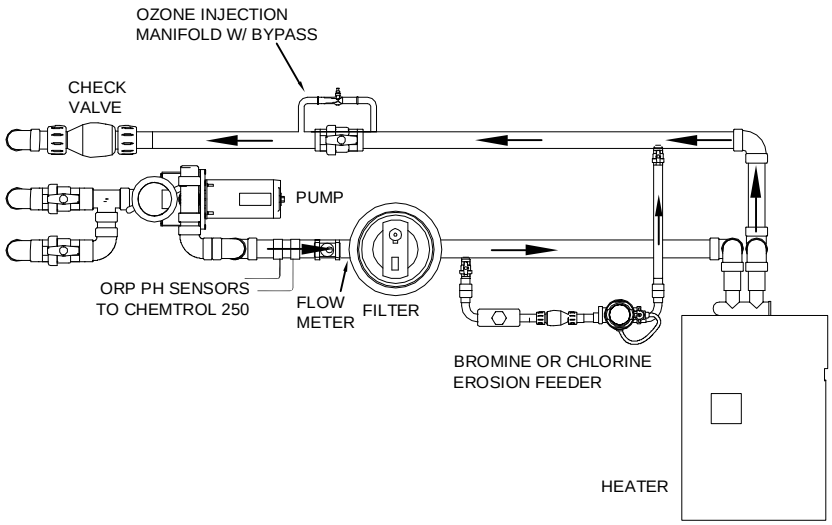

SIZE	DWG TYPE	DWG NO.	REV
A	EQUIPMENT	BEDFORD SPRINGS	0
SCALE 1/4" = 1'-0"	DATE 3/28/2007	SHEET PAGE 6	

NESPA TILED SPAS

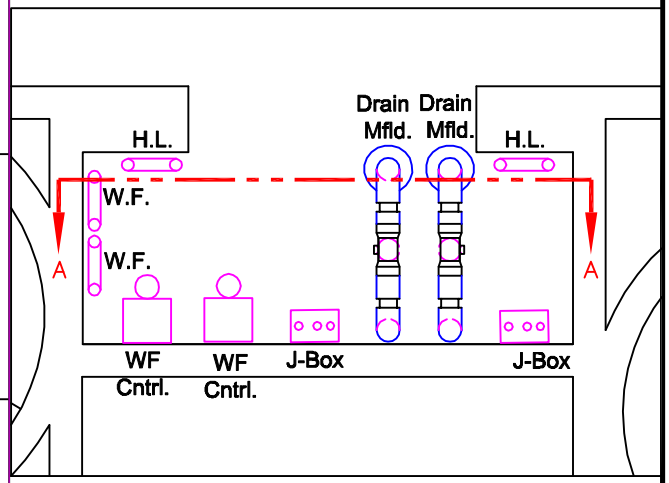

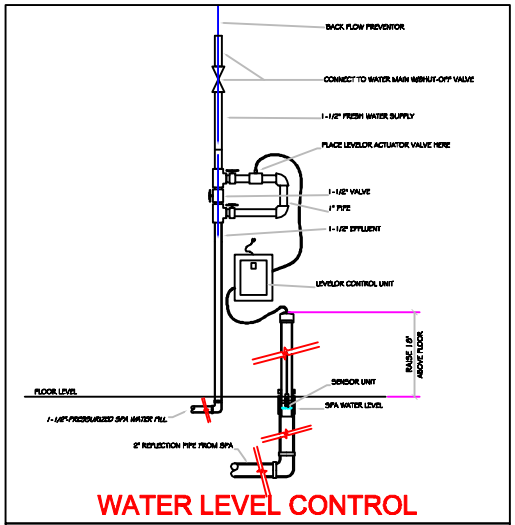

WATER LEVEL CONTROL

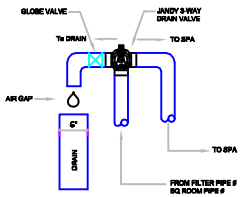

DRAIN VALVE

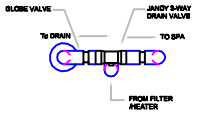

DRAIN VALVE

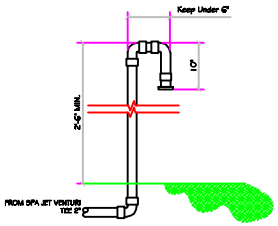

AIR SUPPLY LOOP DETAIL

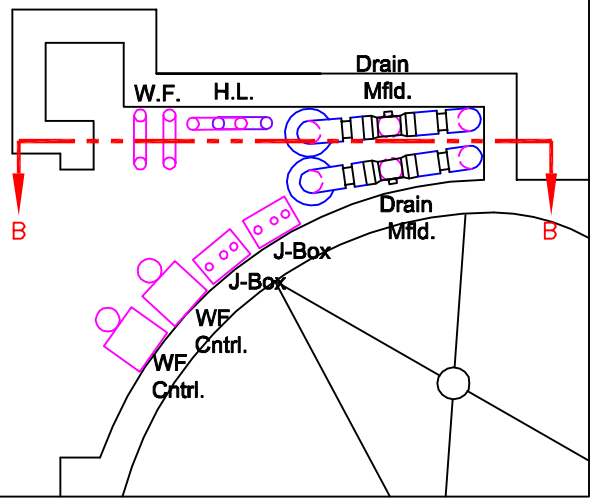

SECTION A–A

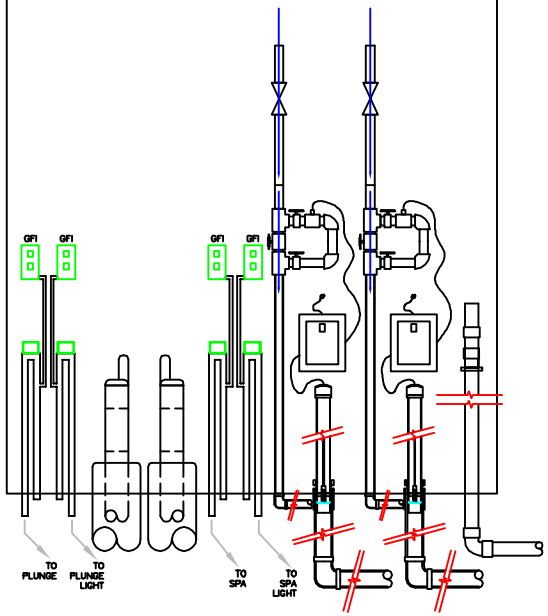

SECTION B–B

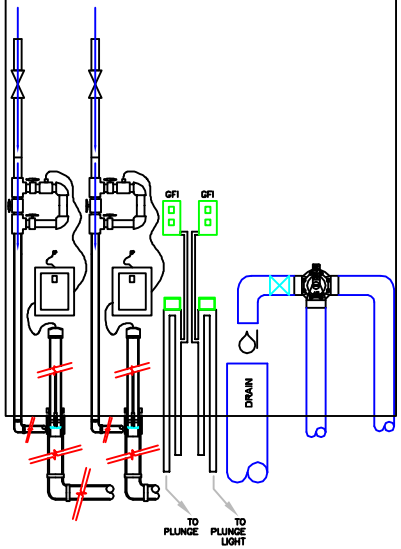

SIZE	DWG TYPE	DWG NO.	REV
A	EQUIP DETAIL	BEDFORD SPRINGS	1
SCALE 1/2" = 1'	DATE 8/28/2006	SHEET PAGE 7	

NESPA TILED SPAS

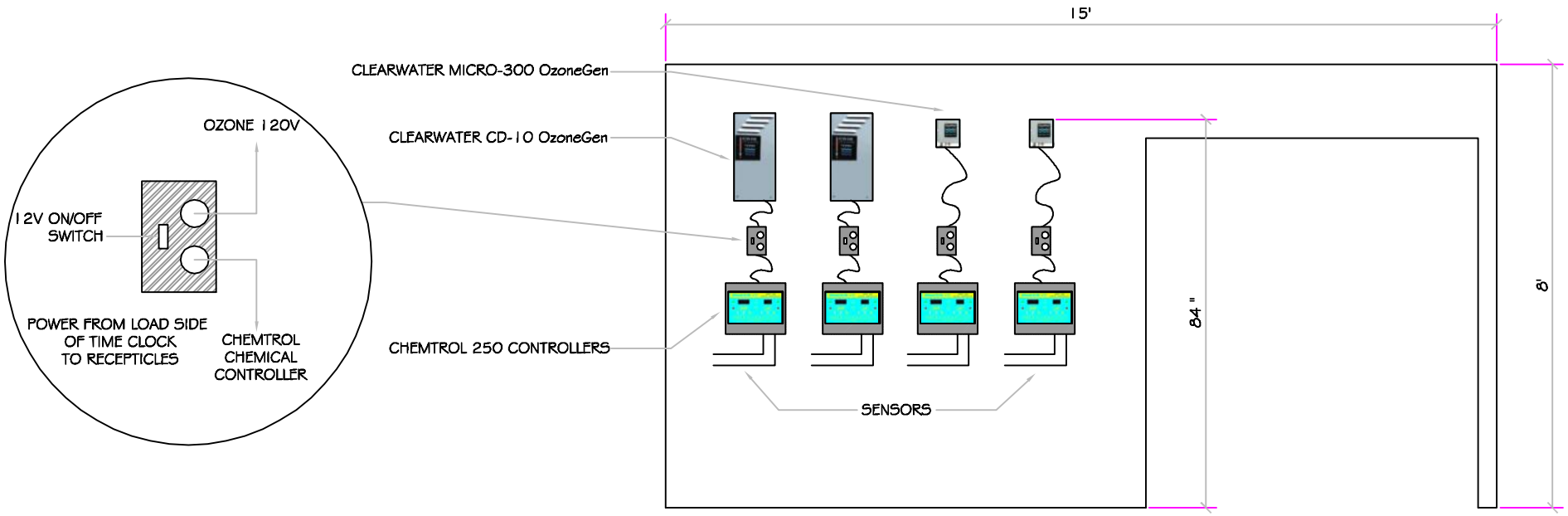

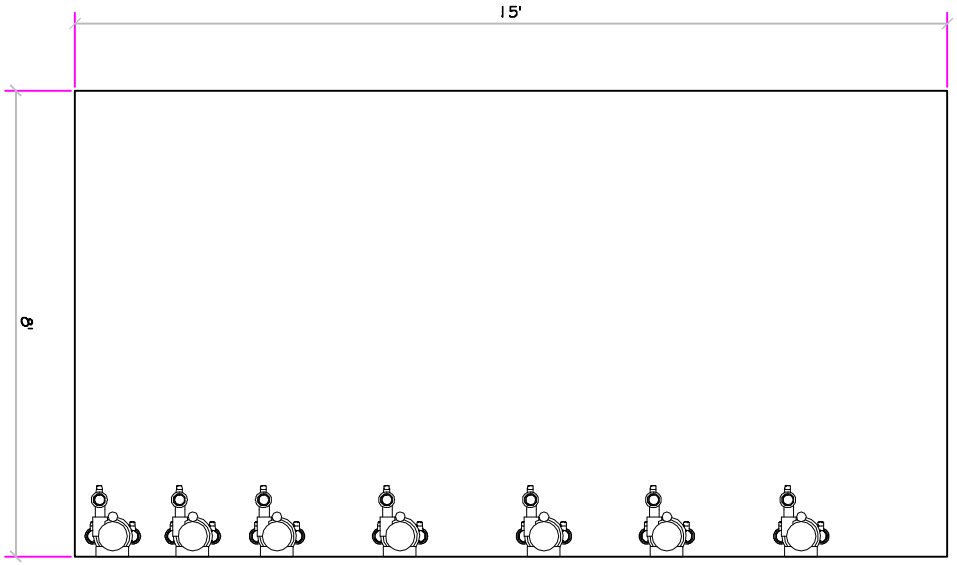

NESPA TILED SPAS	DWG TYPE EQRoom Electrical	DWG NO. BEDFORD SPRINGS	REV 0
	SCALE N/A	DATE 9/27/2006	SHEET PAGE 8

WOMENS SPA EQUIPMENT LIST

ITEM	Name	DESCRIPTION	MANUFACTURER	CATALOG NO.	Quantity
A	A_LightNiche	LIGHT NICHE (FOR UNDERWATER LIGHT) W/ 1" HUB	PENTAIR/PACFAB	782423	1
B	A_Light	SPA BRIGHT UNDERWATER LIGHT, 120 VOLT, 100 WATT, 50' CORD, U.L. APPROVED	PENTAIR/PACFAB	78108100	1
D	A_SkimmerLg	SURFACE SKIMMER W/ EQUALIZER, NSF APPROVED	HAYWARD	SP-1084 FVE	2
E	A_Equalizer	EQUALIZER 4" 3.61 SQ. IN. OPEN AREA, COMPLIES W/ ANSI CODE A112.19	HYDRO-AIR	10-6806	3
F	A_Jet	HYDRO INLETS, 1-1/2" WATER, 1-1/2" AIR	HYDRO-AIR	10-5100	20
G	A_Fill	INLET FITTINGS, 1-1/2", WALL TYPE, W/EYEBALL	HYDRO-AIR	10-3500	4
H	A_Suction	5" HIGH FLOW SUCTIONS 8.39 SQ. IN. OPEN AREA 208 GPM AT 1.5 FT/SEC WATER VELOCITY, COMPLIES W/ ANSI CODE A112.19 UL APPROVED	WATERWAY	640-3850	6
I	A_Handrail	HAND RAIL, STAINLESS STEEL, 5' 0" LENGTH, W/ .065 TUBING WALL THICKNESS	S. R. SMITH	3HR-5-065	2
J	Cup Anchor	Standard Bronze 6" Deep Handrail Cup Anchor	STANDARD BRONZE	5764	4
M	A_Drain12	MAIN DRAIN GRATE, 12" X 12" FRAME, 85 SQ. IN. OPEN AREA, 401 GPM @ 1-1/2 FT/SEC	PAC FAB	54-2020	2

WOMENS PLUNGE EQUIPMENT LIST

ITEM	Name	DESCRIPTION	MANUFACTURER	CATALOG NO.	Quantity
A	A_LightNiche	LIGHT NICHE (FOR UNDERWATER LIGHT) W/ 1" HUB	PENTAIR/PACFAB	782423	1
B	A_Light	SPA BRIGHT UNDERWATER LIGHT, 120 VOLT, 100 WATT, 50' CORD, U.L. APPROVED	PENTAIR/PACFAB	78108100	1
D	A_SkimmerLg	SURFACE SKIMMER W/ EQUALIZER, NSF APPROVED	HAYWARD	SP-1084 FVE	1
G	A_Fill	INLET FITTINGS, 1-1/2", WALL TYPE, W/EYEBALL	HYDRO-AIR	10-3500	2
H	A_Suction	5" HIGH FLOW SUCTIONS 8.39 SQ. IN. OPEN AREA 208 GPM AT 1.5 FT/SEC WATER VELOCITY, COMPLIES W/ ANSI CODE A112.19 UL APPROVED	WATERWAY	640-3850	3
I	A_Handrail	HAND RAIL, STAINLESS STEEL, 4' 0" LENGTH, W/ .065 TUBING WALL THICKNESS	S. R. SMITH	3HR-4-065	1
J	Cup Anchor	Standard Bronze 6" Deep Handrail Cup Anchor	STANDARD BRONZE	5764	1
M	A_Drain9	MAIN DRAIN GRATE, 9" X 9" FRAME, 49 SQ. IN. OPEN AREA, 299 GPM @ 1-1/2 FT/SEC	PAC FAB	54-2019	2

MENS SPA EQUIPMENT LIST

ITEM	Name	DESCRIPTION	MANUFACTURER	CATALOG NO.	Quantity
A	A_LightNiche	LIGHT NICHE (FOR UNDERWATER LIGHT) W/ 1" HUB	PENTAIR/PACFAB	782423	1
B	A_Light	SPA BRIGHT UNDERWATER LIGHT, 120 VOLT, 100 WATT, 50' CORD, U.L. APPROVED	PENTAIR/PACFAB	78108100	1
D	A_SkimmerLg	SURFACE SKIMMER W/ EQUALIZER, NSF APPROVED	HAYWARD	SP-1084 FVE	1
E	A_Equalizer	EQUALIZER 4" 3.61 SQ. IN. OPEN AREA, COMPLIES W/ ANSI CODE A112.19	HYDRO-AIR	10-6806	2
F	A_Jet	HYDRO INLETS, 1-1/2" WATER, 1-1/2" AIR	HYDRO-AIR	10-5100	8
G	A_Fill	INLET FITTINGS, 1-1/2", WALL TYPE, W/EYEBALL	HYDRO-AIR	10-3500	3
H	A_Suction	5" HIGH FLOW SUCTIONS 8.39 SQ. IN. OPEN AREA 208 GPM AT 1.5 FT/SEC WATER VELOCITY, COMPLIES W/ ANSI CODE A112.19 UL APPROVED	WATERWAY	640-3850	4
I	A_Handrail	HAND RAIL, STAINLESS STEEL, 4' 0" LENGTH, W/ .065 TUBING WALL THICKNESS	S. R. SMITH	3HR-3-065	1
J	Cup Anchor	Standard Bronze 6" Deep Handrail Cup Anchor	STANDARD BRONZE	5764	2
M	A_Drain9	MAIN DRAIN GRATE, 9" X 9" FRAME, 49 SQ. IN. OPEN AREA, 299 GPM @ 1-1/2 FT/SEC	PAC FAB	54-2019	2

MENS PLUNGE EQUIPMENT LIST

ITEM	Name	DESCRIPTION	MANUFACTURER	CATALOG NO.	Quantity
A	A_LightNiche	LIGHT NICHE (FOR UNDERWATER LIGHT) W/ 1" HUB	PENTAIR/PACFAB	782423	1
B	A_Light	SPA BRIGHT UNDERWATER LIGHT, 120 VOLT, 100 WATT, 50' CORD, U.L. APPROVED	PENTAIR/PACFAB	78108100	1
D	A_SkimmerLg	SURFACE SKIMMER W/ EQUALIZER, NSF APPROVED	HAYWARD	SP-1084 FVE	1
G	A_Fill	INLET FITTINGS, 1-1/2", WALL TYPE, W/EYEBALL	HYDRO-AIR	10-3500	2
H	A_Suction	5" HIGH FLOW SUCTIONS 8.39 SQ. IN. OPEN AREA 208 GPM AT 1.5 FT/SEC WATER VELOCITY, COMPLIES W/ ANSI CODE A112.19 UL APPROVED	WATERWAY	640-3850	4
I	A_Handrail	HAND RAIL, STAINLESS STEEL, 4' 0" LENGTH, W/ .065 TUBING WALL THICKNESS	S. R. SMITH	3HR-4-065	1
J	Cup Anchor	Standard Bronze 6" Deep Handrail Cup Anchor	STANDARD BRONZE	5764	2
M	A_Drain9	MAIN DRAIN GRATE, 9" X 9" FRAME, 49 SQ. IN. OPEN AREA, 299 GPM @ 1-1/2 FT/SEC	PAC FAB	54-2019	2

COED SPA EQUIPMENT LIST

ITEM	Name	DESCRIPTION	MANUFACTURER	CATALOG NO.	Quantity
A	A_LightNiche	LIGHT NICHE (FOR UNDERWATER LIGHT) W/ 1" HUB	PENTAIR/PACFAB	782423	1
B	A_LightLV	LOW VOLTAGE WATERWAY LIGHT	WATERWAY	L/V LIGHT	1
D	A_SkimmerLg	SURFACE SKIMMER W/ EQUALIZER, NSF APPROVED	HAYWARD	SP-1084 FVE	2
E	A_Equalizer	EQUALIZER 4" 3.61 SQ. IN. OPEN AREA, COMPLIES W/ ANSI CODE A112.19	HYDRO-AIR	10-6806	2
F	A_Jet	HYDRO INLETS, 1-1/2" WATER, 1-1/2" AIR	HYDRO-AIR	10-5100	12
G	A_Fill	INLET FITTINGS, 1-1/2", WALL TYPE, W/EYEBALL	HYDRO-AIR	10-3500	3
H	A_Suction	5" HIGH FLOW SUCTIONS 8.39 SQ. IN. OPEN AREA 208 GPM AT 1.5 FT/SEC WATER VELOCITY, COMPLIES W/ ANSI CODE A112.19 UL APPROVED	WATERWAY	640-3850	6
I	A_Handrail	HAND RAIL, STAINLESS STEEL, 4' 0" LENGTH, W/ .065 TUBING WALL THICKNESS	S. R. SMITH	3HR-4-065	2
J	Cup Anchor	Standard Bronze 6" Deep Handrail Cup Anchor	STANDARD BRONZE	5764	4
M	A_Drain12	MAIN DRAIN GRATE, 12" X 12" FRAME, 85 SQ. IN. OPEN AREA, 401 GPM @ 1-1/2 FT/SEC	PAC FAB	54-2020	2

SIZE	DWG TYPE	DWG NO.	REV
A	EQUIPMENT LIST	BEDFORD SPRINGS	0
SCALE N/A	DATE 9/24/2006	SHEET PAGE 9	

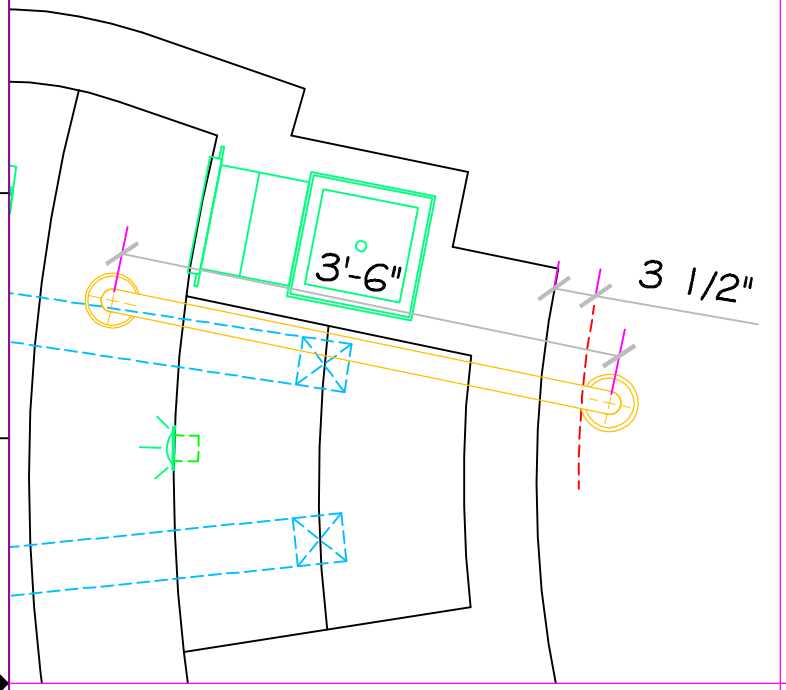

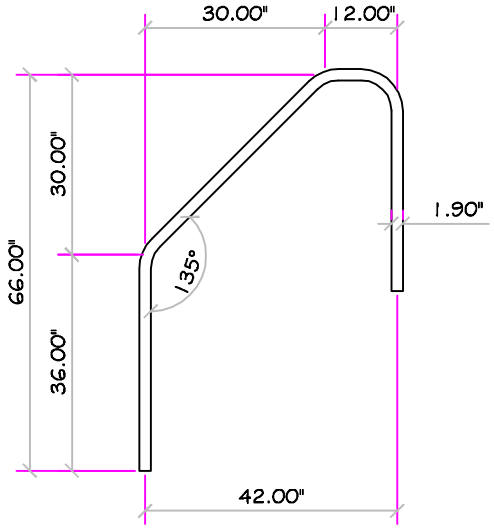

WOMENS CP
MENS CP

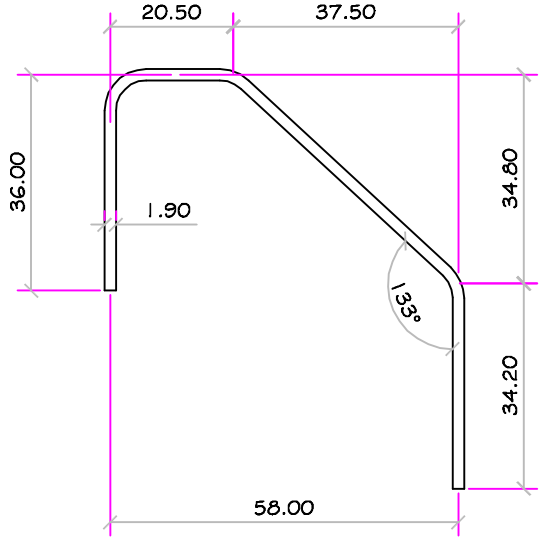

WOMENS (2)

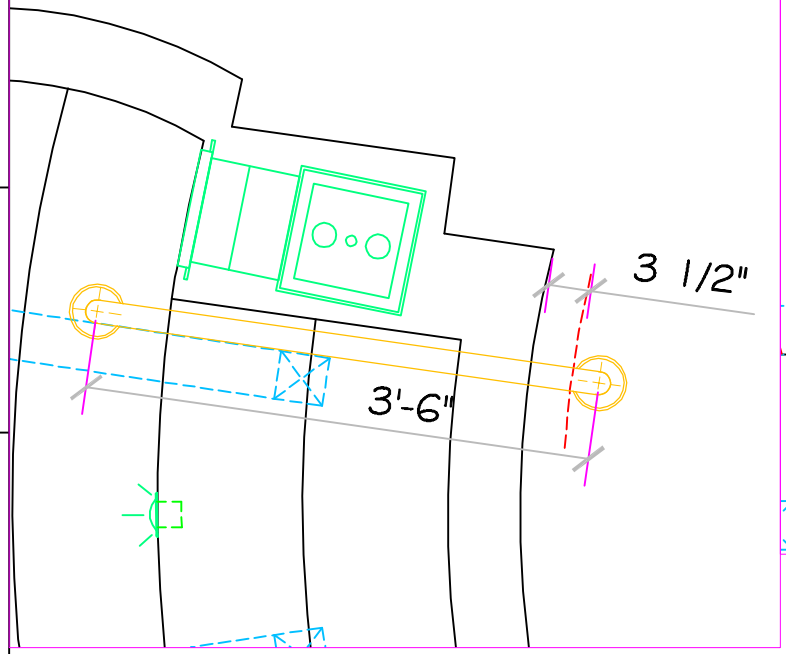

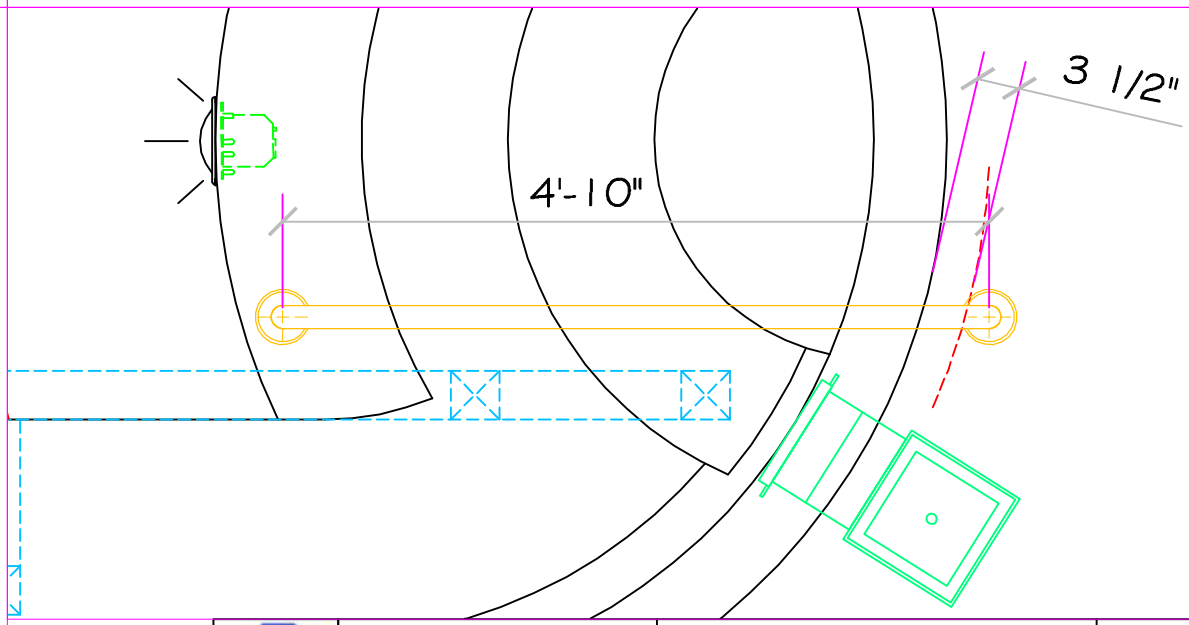

NESPA TILED SPAS	DWG TYPE: HANDRAIL DETAIL	DWG NO.: BEDFORD SPRINGS	REV: 2
	SCALE: 3/8" = 1'	DATE: 10/9/2006	SHEET: PAGE 10

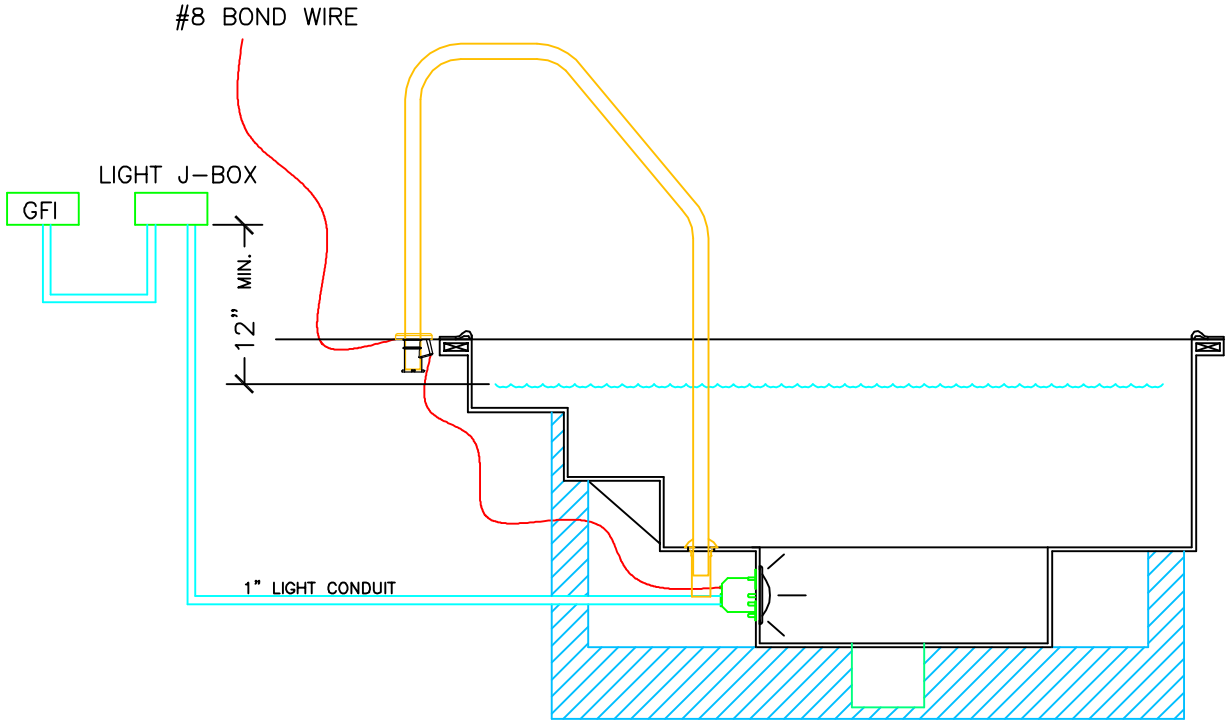

POOL BONDING REQUIREMENTS:

1. THE FOLLOWING PARTS SHALL BE BONDED TOGETHER AND CONNECTED TO THE COMMON BONDING GRID.
   - A. ALL THE METALLIC PARTS OF THE POOL STRUCTURE INCLUDING COPYING STONES, DECK, PERMANENT PLAY STRUCTURES, PERMANENT EXERCISE STRUCTURES.
   - B. ALL METAL FITTINGS WITHIN OR ATTACHED TO THE POOL STRUCTURE
   - C. METAL PARTS ASSOCIATED WITH THE POOL WATER CIRCULATING SYSTEM, INCLUDING PUMPS, FILTERS, AND HEATERS.
   - D. METAL PARTS ASSOCIATED WITH POOL COVERS
   - E. METAL SHEATHED CABLES AND RACEWAYS, METAL PIPING AND ALL FIXED METAL PARTS WITHIN 5 FEET HORIZONTALLY OF INSIDE WALLS OF POOL AND WITHIN 12 FEET ABOVE MAXIMUM WATER LEVEL OF POOL.
   - F. METAL PARTS ASSOCIATED WITH OBSERVATION STANDS, TOWERS, PLATFORMS, AND DIVING STRUCTURES.

2. BONDING CONDUCTORS SHALL BE MINIMUM #8 SOLID COPPER, INSULATED E.C. SHALL COORDINATE APPROVED CONNECTOR TYPE AND METHOD WITH LOCAL ELECTRICAL AND/ OR POOL INSPECTOR.

3. SPECIFIC MANUFACTURER'S INSTRUCTIONS REGARDING BONDING OR GROUNDING OF POOL EQUIPMENT, WHETHER INDICATED HEREIN OR NOT, SHALL BE STRICTLY FOLLOWED.

4. THE COMMON BONDING GRID SHALL NOT BE CONNECTED TO ANY ELECTRICAL DISTRIBUTION EQUIPMENT.

5. ANY PARTS IN ADDITION TO THOSE DESCRIBED HEREIN THAT ARE INDICATED BY POOL CONTRACTOR OR LOCAL INSPECTION AUTORITY SHALL BE BONDED TO THE COMMON BONDING GRID WITH NO ADDITIONAL COSTS INCURRED BY THE OWNER.

6. THE ELECTRICAL CONTRACTOR SHALL COORDINATE BONDING WITH GENERAL CONTRACTOR.

NESPA TILED SPAS	SIZE	DWG TYPE	DWG NO.	REV
	A	HANDRAIL BONDING	BEDFORD SPRINGS	4
	SCALE 1/2" = 1'	DATE 9/24/2006	SHEET PAGE 11	

PIPE ID SCHEDULE

#	DESCRIPTION	PIPE SIZE (INCH.)	FLOW (G.P.M.)	VELOCITY (F.P.S.)	DIM FROM WALL
MW1	MEN'S WHIRLPOOL: WATER FILL PIPE	1.5	64	10	
MW2	WATER FILL SENSOR/REFLECTION PIPE	2	N/A	N/A	
MW3	CIRCULATION PUMP MAIN DRAIN SUCTION	3	118	5.14	6'-11"
MW4	CIRCULATION PUMP SKIMMER SUCTION	3	70	3.47	7'-8"
MW5	BOOSTER JET SUCTION FROM MAIN DRAIN BOXES	4	143	3.58	14'-4"
MW6	CIRCULATION SPA RETURN PIPE	3	118	5.14	6'-3"
MW6A	CIRCULATION SPA RETURN PIPE	3	118	5.14	
MW7	BOOSTER JET RETURN PIPE	4	143	3.58	13'-8"
MWLT	LIGHT CONDUIT	1	N/A	N/A	
MWC42	ELECTRICAL CONDUIT	1	N/A	N/A	
MWCTRL	EMERGENCY CONTROL SWITCH CONDUIT	1	N/A	N/A	
MX3	EXTRA 3" CONDUIT	3	N/A	N/A	5'-10"
MP8	MEN'S PLUNGE POOL: WATER FILL PIPE	1.5	64	10	
MP9	WATER FILL SENSOR/REFLECTION PIPE	2	N/A	N/A	
MP10	PLUNGE CIRCULATION PUMP MAIN DRAIN SUCTIONS	3	100	4.34	4'-10"
MP10A	PLUNGE CIRCULATION PUMP SKIMMER SUCTIONS	3	100	4.34	5'-6"
MP11	PLUNGE CIRCULATION RETURN PIPE	3	100	4.34	4'-2"
MP11A	PLUNGE CIRCULATION RETURN PIPE	3	100	4.34	
MP12	MEN'S WHIRLPOOL JET AIR VENTURI INTAKE PIPE	2	N/A	N/A	
MPLT	LIGHT CONDUIT	1	N/A	N/A	
MCP43	ELECTRICAL CONDUIT	1	N/A	N/A	
MEXT44	ELECTRICAL CONDUIT	1	N/A	N/A	
MX3	EXTRA 3" CONDUIT	3	N/A	N/A	8'-2"

#	DESCRIPTION	PIPE SIZE (INCH.)	FLOW (G.P.M.)	VELOCITY (F.P.S.)	DIM FROM WALL
WW13	WOMEN'S WHIRLPOOL: WATER FILL PIPE	1.5	64	10	
WW14	WATER FILL SENSOR/REFLECTION PIPE	2	N/A	N/A	
WW15	CIRCULATION SUCTION FROM MAIN DRAIN	3	118	5.14	9'-5"
WW16	CIRCULATION SKIMMER SUCTION TO PUMP	3	70	3.43	10'-1"
WW17	CIRCULATION RETURN SUPPLY TO SPA	3	118	5.14	8'-9"
WW18	BOOSTER MAIN DRAIN SUCTION (1)	4	143	3.58	11'-6"
WW19	BOOSTER MAIN DRAIN SUCTION (2)	4	143	3.58	13'-0"
WW20	BOOSTER JET RETURN SUPPLY LINE (1)	4	143	3.58	10'-10"
WW21	BOOSTER JET RETURN SUPPLY LINE (2)	4	143	3.58	12'-3"
WW22	BOOSTER JET AIR VENTURI SUPPLY (1)	2	N/A	N/A	
WW23	BOOSTER JET AIR VENTURI SUPPLY (2)	2	N/A	N/A	
WWLT	LIGHT CONDUIT	1	N/A	N/A	
WWC46	ELECTRICAL CONDUIT	1	N/A	N/A	
WEXT47	ELECTRICAL CONDUIT	1	N/A	N/A	
WX3	EXTRA 3" CONDUIT	3	N/A	N/A	3'-6"
WX4	EXTRA 4" CONDUIT	4	N/A	N/A	15'-0"
WP24	WOMENS PLUNGE POOL: WATER FILL PIPE	1.5	64	10.0	
WP25	PLUNGE AUTO WATER FILL SENSOR/REFLECTION PIPE	2	N/A	N/A	
WP26	CIRCULATION SUCTION FROM MAIN DRAIN	3	100	4.34	2'-6"
WP27	CIRCULATION SKIMMER SUCTION PIPE	3	70	3.43	3'-3"
WP28	CIRCULATION RETURN SUPPLY PIPE TO 3-WAY VALVE	3	100	3.43	1'-10"
WPLT	SPA LIGHT ELECTRICAL CONDUIT TO ROOM WC2	1	N/A	N/A	
WP30	CIRCULATION RETURN SUPPLY TO SPA	3	N/A	N/A	
WPLT	LIGHT CONDUIT	1	N/A	N/A	
WCP45	ELECTRICAL CONDUIT	1	N/A	N/A	
WX3	EXTRA 3" CONDUIT	3	N/A	N/A	3'-10"

NESPA TILED SPAS

SIZE	DWG TYPE	DWG NO.	REV
A	PIPE CHART	BEDFORD SPRINGS	1
SCALE N/A	DATE 8/22/2006	SHEET PAGE 12	

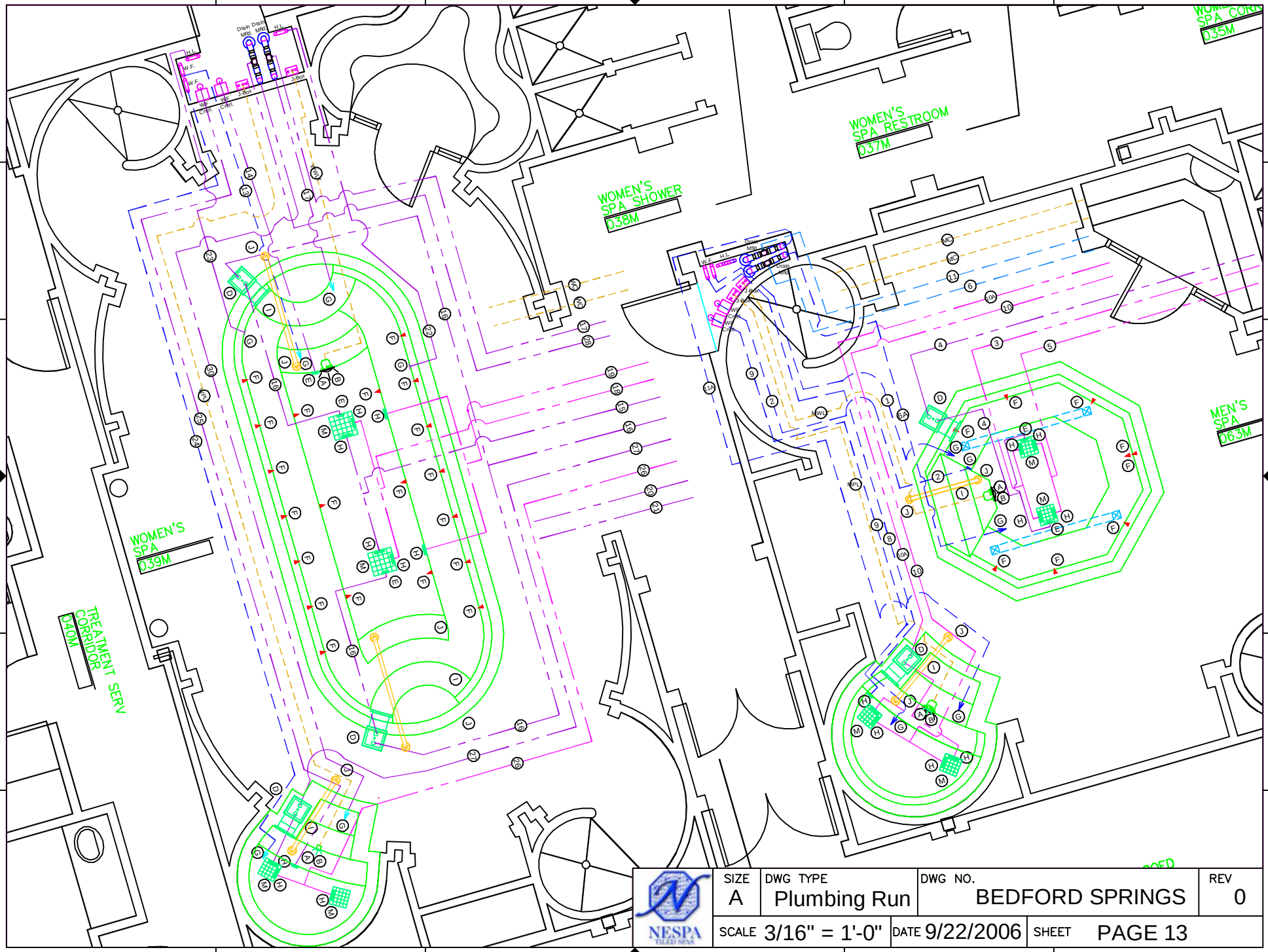

NESPA TILED SPAS	SIZE A	DWG TYPE Plumbing Run	DWG NO. BEDFORD SPRINGS	REV 0
	SCALE 3/16" = 1'-0"	DATE 9/22/2006	SHEET PAGE 13	

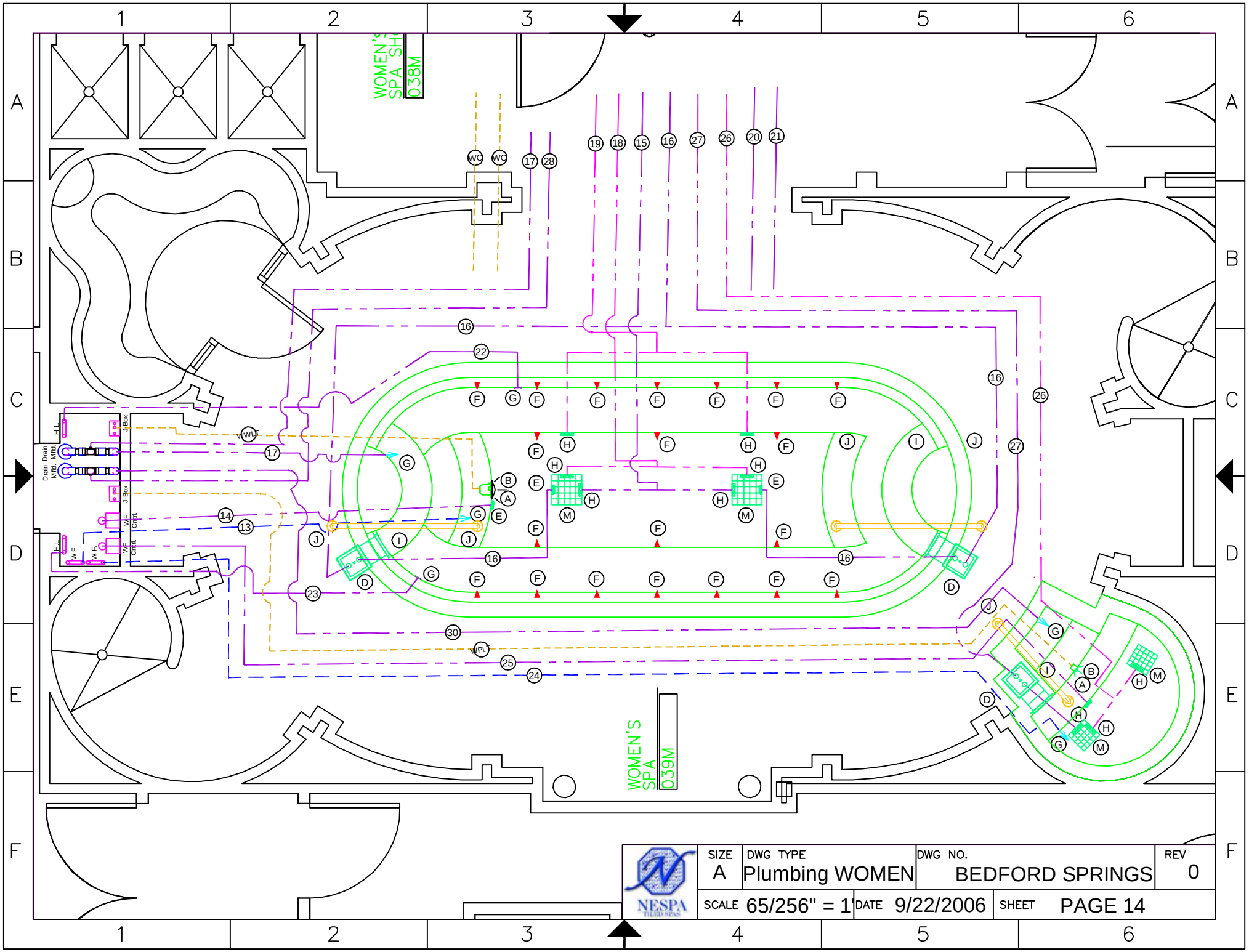
WOMEN'S SPA SHOWER
038M
WOMEN'S SPA
039M
WC
WC
WWLT
WPLT
Drain Mfld.
Drain Mfld.
H.L.
J-Box
J-Box
W.F.
W.F.
W.F.
W.F.
Cntrl.
Cntrl.
NESPA
TILED SPAS
SIZE
A
DWG TYPE
Plumbing WOMEN
DWG NO.
BEDFORD SPRINGS
REV
0
SCALE 65/256" = 1'
DATE 9/22/2006
SHEET PAGE 14

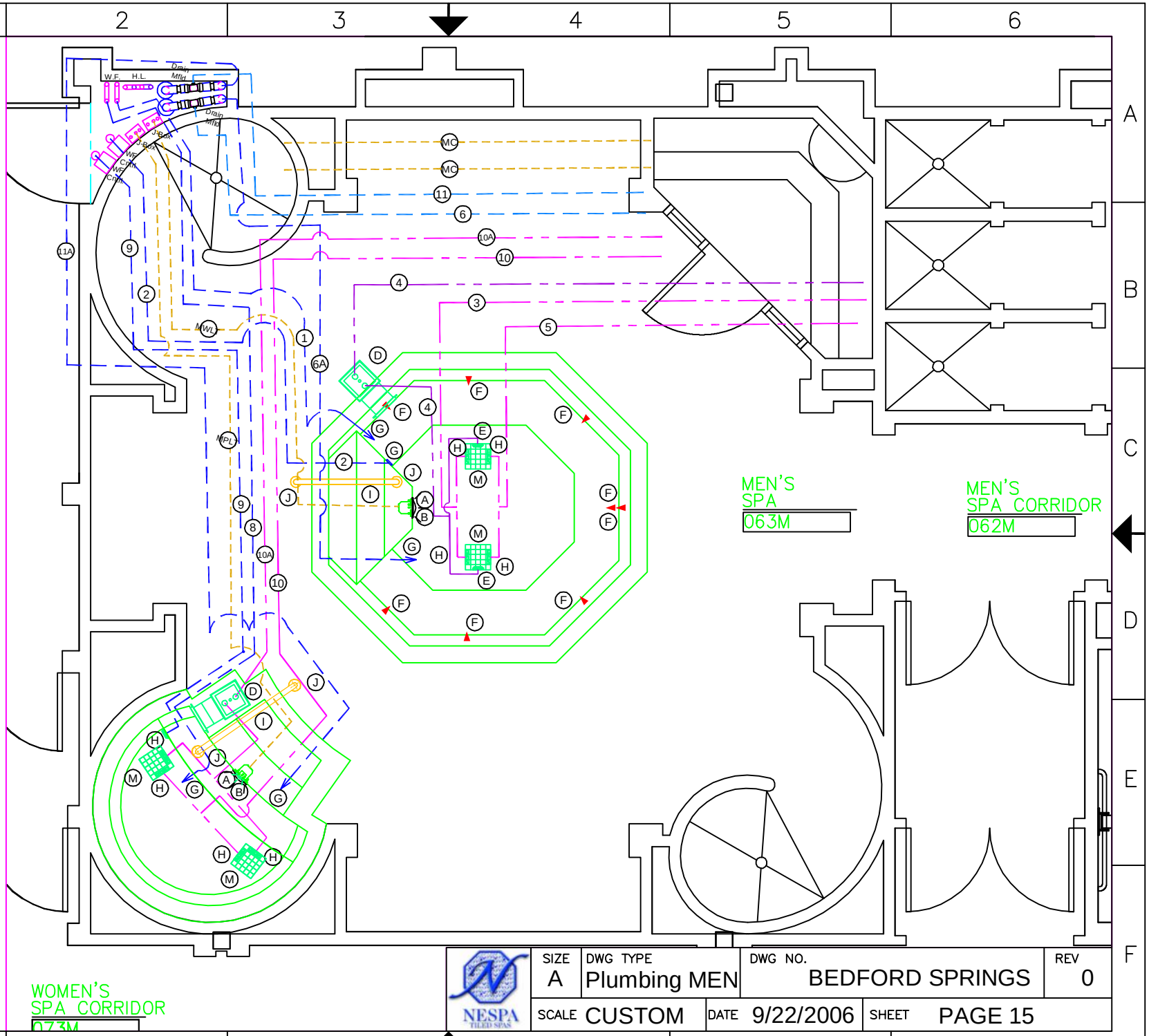

SIZE	DWG TYPE	DWG NO.	REV
A	Plumbing MEN	BEDFORD SPRINGS	0
SCALE CUSTOM	DATE 9/22/2006	SHEET PAGE 15	

NESPA TILED SPAS

2 PUMP - Gas Heater - High Voltage Light
MEN'S WHIRLPOOL

NOTE:
THIS SCHEMATIC IS FOR CONCEPTUAL PURPOSES ONLY AND IS BASED ON SINGLE PHASE POWER INPUT. IF THREE PHASE POWER INPUT IS USED THEN CONSULT A LICENSED ELECTRICIAN AND COMPLY WITH ALL APPLICABLE NATIONAL AND LOCAL CODES.

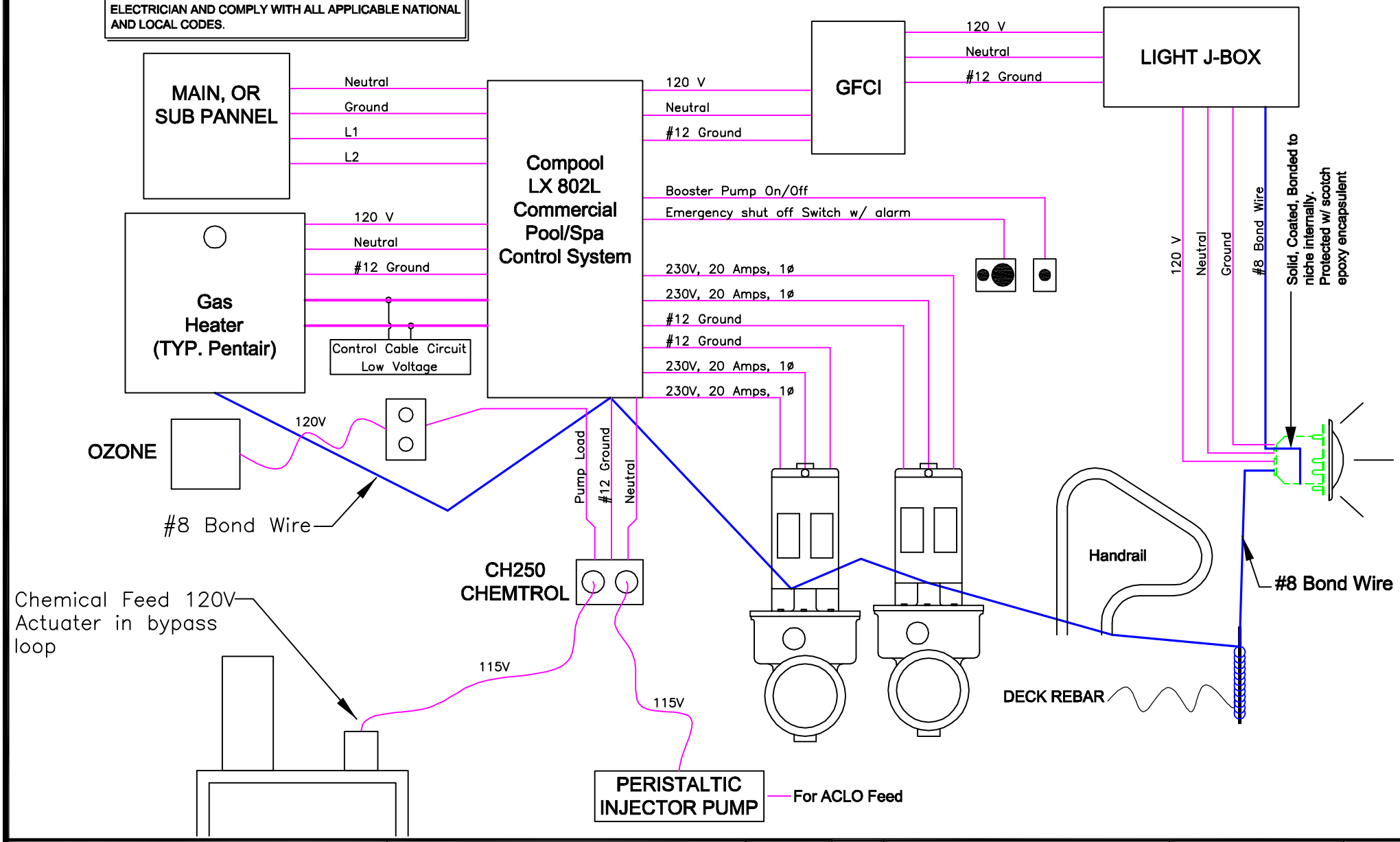

NESPA ENTERPRISES INC.
2800 Richter Ave. Ste. C Oroville, CA 95966
Office: (530) 534-9910 Fax: (530) 534-9915
E-Mail: sales@tiledspas.com Web Site: www.tiledspas.com

SIZE	DWG TYPE	DWG NO.	REV
A	MENS WHIRLPOOL	2 PUMP GH HV	0
SCALE N/A	DATE 4/23/2007	SHEET PAGE 2 OF 3	

1 PUMP - High Voltage Light
COLD PLUNGE

NOTE:
THIS SCHEMATIC IS FOR CONCEPTUAL PURPOSES ONLY AND IS BASED ON SINGLE PHASE POWER INPUT. IF THREE PHASE POWER INPUT IS USED THEN CONSULT A LICENSED ELECTRICIAN AND COMPLY WITH ALL APPLICABLE NATIONAL AND LOCAL CODES.

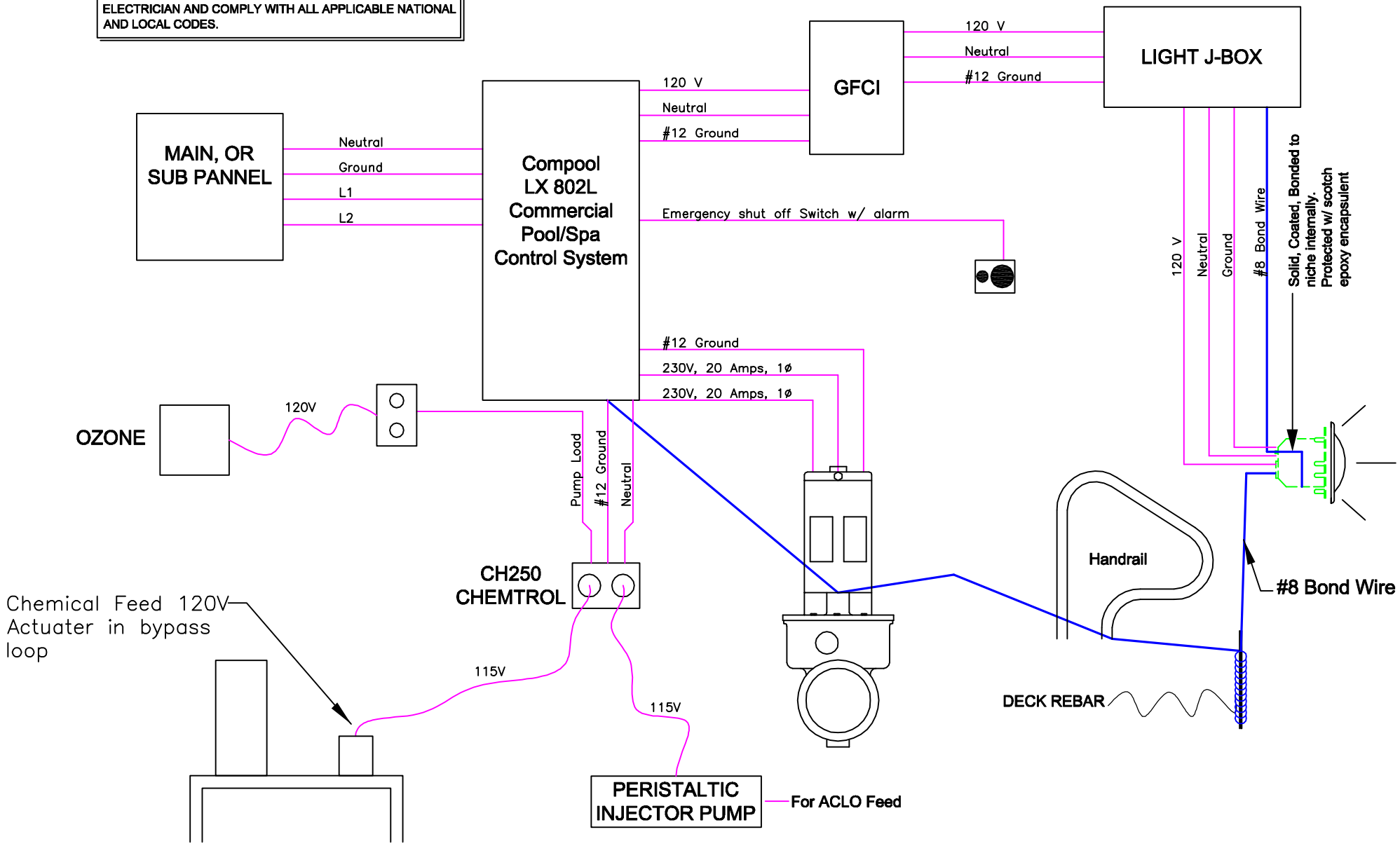

NESPA ENTERPRISES INC.
2800 Richter Ave. Ste. C Oroville, CA 95966
Office: (530) 534-9910 Fax: (530) 534-9915
E-Mail: sales@tiledspas.com Web Site: www.tiledspas.com

SIZE	DWG TYPE	DWG NO.	REV
A	COLD PLUNGE	1 PUMP GH HV	0
SCALE N/A	DATE 4/23/2007	SHEET PAGE 3 OF 3	

3 PUMP - Gas Heater - High Voltage Light
WOMEN'S WHIRLPOOL

NOTE:
THIS SCHEMATIC IS FOR CONCEPTUAL PURPOSES ONLY AND IS BASED ON SINGLE PHASE POWER INPUT. IF THREE PHASE POWER INPUT IS USED THEN CONSULT A LICENSED ELECTRICIAN AND COMPLY WITH ALL APPLICABLE NATIONAL AND LOCAL CODES.

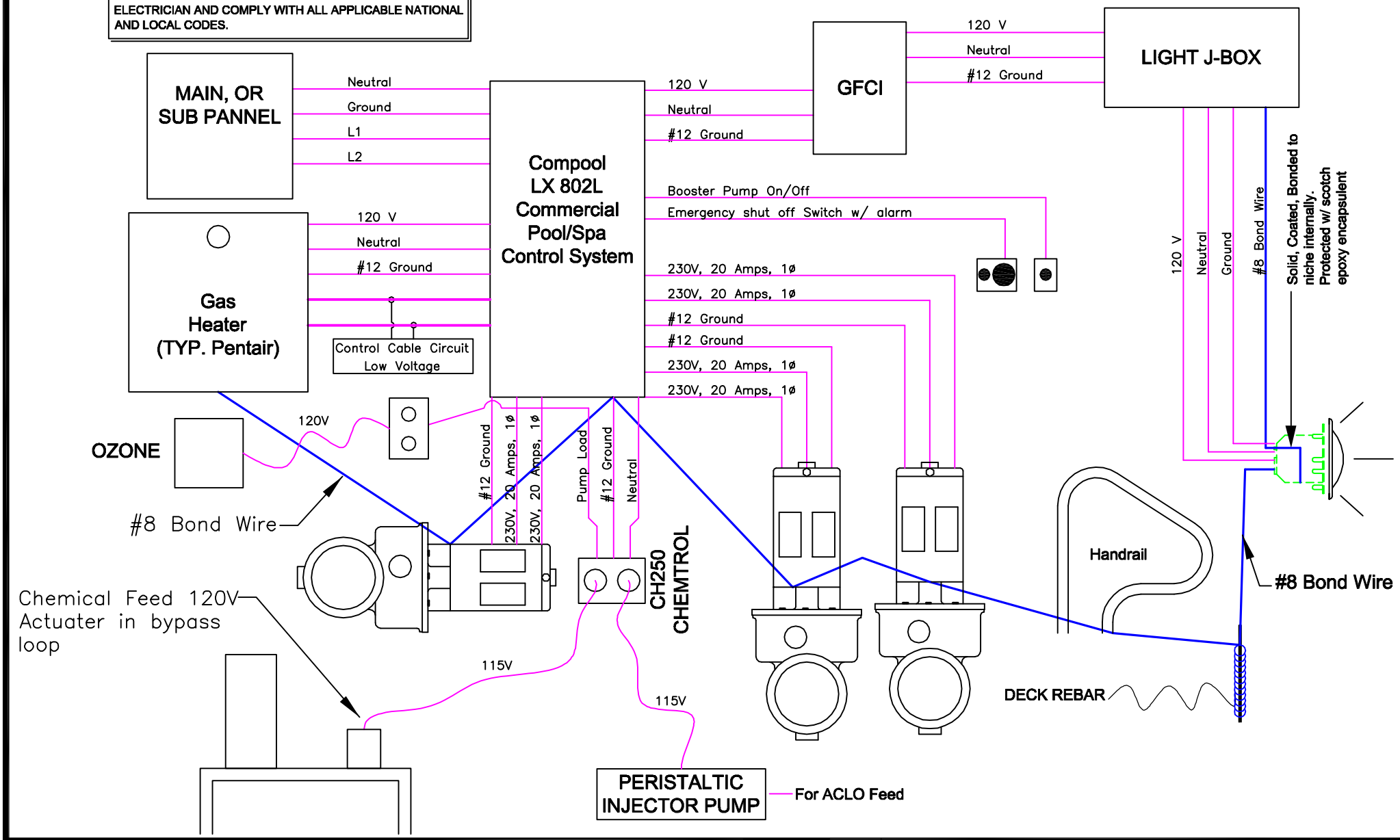

NESPA ENTERPRISES INC.
2800 Richter Ave. Ste. C Oroville, CA 95966
Office: (530) 534-9910 Fax: (530) 534-9915
E-Mail: sales@tiledspas.com Web Site: www.tiledspas.com

SIZE	DWG TYPE	DWG NO.	REV
A	WOMENS WHIRLPOOL	3 PUMP GH HV	0
SCALE N/A	DATE 4/23/2007	SHEET PAGE 1 OF 3	

EQUIPMENT NAME	VOLT	PHASE	HP/W	AMPS EA.	CIRCUIT EA.
F1 WOMAN'S FILTER PUMP - 3HP	230	1	3 HP	11 A	20 A
F2 MEN'S FILTER PUMP - 2HP	230	1	2.0 HP	9 A	
F3 MEN'S FILTER PLUNGE POOL - 1-1/2 HP	230	1	1.5 HP	6.4 A	20 A
F4 WOMAN'S FILTER PLUNGE POOL - 1-1/2 HP	230	1	1.5 HP	6.4 A	20 A
B1 MEN'S BOOSTER JET PUMP PUMP - 3HP	230	1	3 HP	11 A	20 A
B2 WOMAN'S BOOSTER JET PUMP PUMP - 3HP	230	1	3 HP	11 A	20 A
B3 WOMAN'S BOOSTER JET PUMP PUMP - 3HP	230	1	3 HP	11 A	20 A
C1 CHLORINATORS - 320's (4)	–	–	–	–	–
O2 OZONE INJECTION MANIFOLDS (4)	115	1	–	< 10 A	15 A GFI
B4 CO-ED BOOSTER JET PUMP PUMP - 3HP	230	1	3 HP	11 A	20 A
B5 CO-ED BOOSTER JET PUMP PUMP - 3HP	230	1	3 HP	11 A	20 A
F5 CO-ED FILTER SPA - 1-1/2 HP	230	1	1.5 HP	6.4 A	20 A
C1 CHLORINATOR - 320	–	–	–	–	–
O2 OZONE INJECTION MANIFOLD	115	1	–	< 10 A	15 A GFI

SIZE A	DWG TYPE Electrical Load	DWG NO. BEDFORD SPRINGS	REV 1
SCALE N/A	DATE 9/25/2006	SHEET PAGE 19	

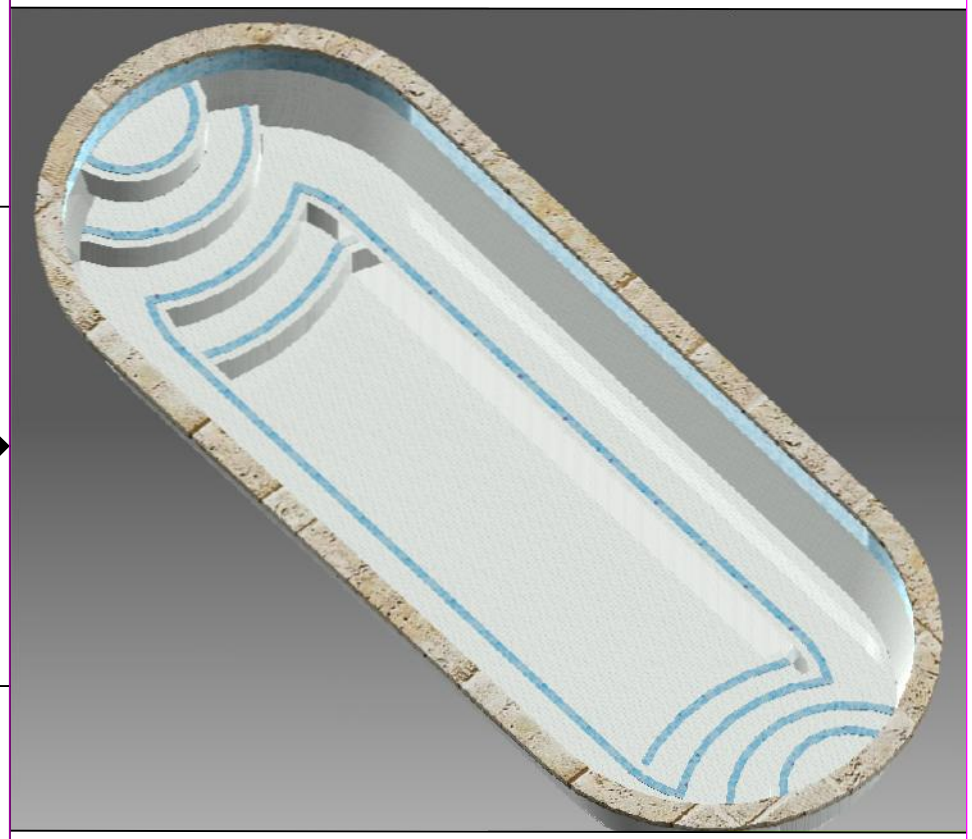

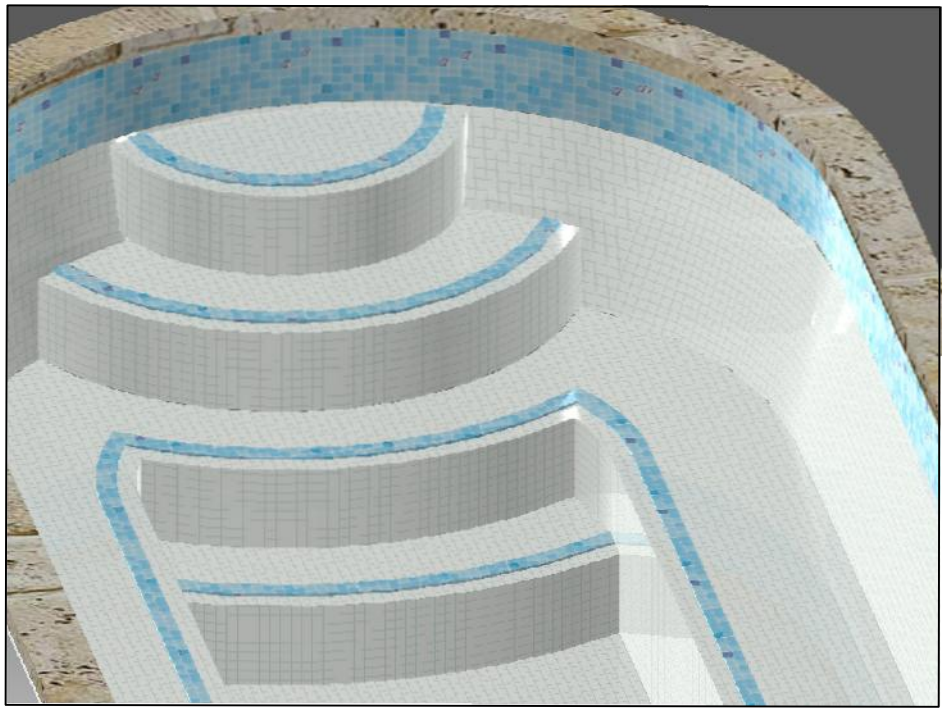

NESPA TILED SPAS	SIZE A	DWG TYPE RENDER WP	DWG NO. BEDFORD SPRINGS	REV 0
	SCALE N/A	DATE 8/23/2006	SHEET PAGE 20	

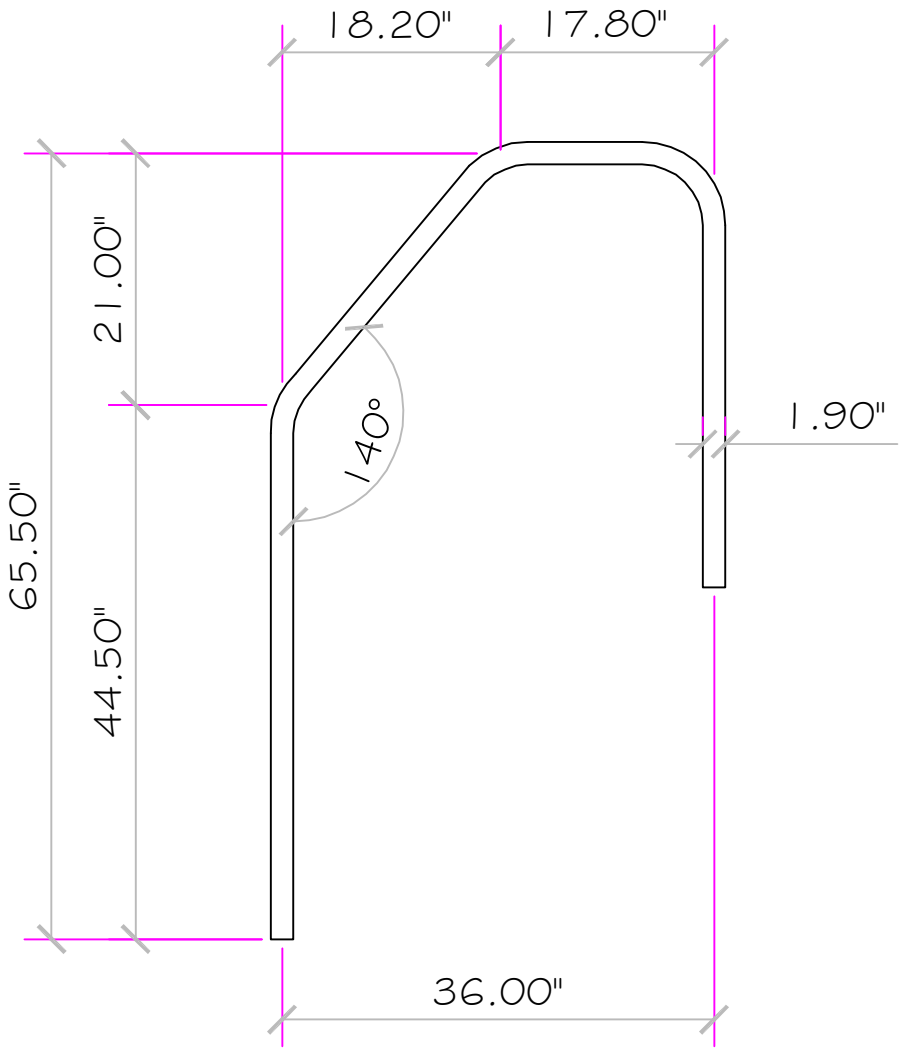

MENS

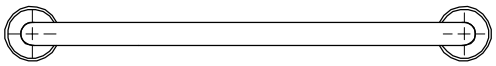

NESPA TILED SPAS	SIZE A	DWG TYPE Mens HANDRAIL	DWG NO. BEDFORD SPRINGS	REV 0
	SCALE 3/4" = 1'	DATE 9/28/2006	SHEET PAGE 1	

STANDARD NESPA
IN-GROUND INSTALLATION
INSTRUCTIONS

SET-UP AND EXCAVATION:

1) **In order to determine how to excavate for your spa or swim spa, measure spas inside dimension (I.D.) and add 8" to all sides. This 8" clearance is to accommodate jet and suction plumbing. This 8"clearance can change or be reduced upon request. Note: skimmer location, this area may have to be larger than 8". If you have questions call us. (888) 479-4677.**
2) **Hole depth is determined by spa's outside height dimension. This height may vary depending if spa has skids or no skids. Also consider the finish surrounding deck elevations, thickness of the finish material on spa upper horizontal lip. This material can be tile, stone, concrete or brick.**
3) **Preplumb spa before it goes into the hole.**
4) **Spa should sit on level 3 ½" thick reinforced concrete pad.**
5) **Install spa into the hole on top of concrete pad. Do not hold onto pipes. Use caution with suction and jet plumbing when lowering into hole. DO NOT STRESS FITTINGS !**
6) **Check site reference points for proper spa positioning (i.e., squaring to house, garage, etc.).**
7) **Shim to level spa. Shim with non-compression able material.**
8) **Dry pack with cement gaps that have been created when shimming spa level.**
9) **Connect pipes to tees if preplumbed. After electrical conduit is connected to light niche, water test spa before back filling with sand.**
10) **All Nespa products are water tested prior to leaving factory.**

ELECTRICAL:

1) **All electrical connections to spa or equipment should comply with the national electrical code. (NEC)**
2) **Connect electrical conduit to light niche. This work should be done or reviewed by a licensed electrician.**
3) **To install spa light you will need to include inside the PVC conduit to the light niche a solid #8 coated copper wire. (If you are use brass conduit, internal bond wire is not required.) This bond wire should be pulled with the light cord at the same time. This bond wire needs to be attached to the internal bonding lug of the light niche. An approved encapsulate should be applied to bond wire connection in niche.**
4) **An external #8 copper wire shall be connected to the external bonding lug on the rear of the light niche. This copper wire can then be used for additional bonding requirements (i.e., handrails or any other metallic object within 5' of the spa.**

PLUMBING:

1) **When plumbing a Nespa it is important to properly size the plumbing. We highly recommend that you follow the pump manufacturer's pipe sizing requirements.**

Example is spas within 50' of equipment, a 2 ½" suction, a 2 ½" return would be used.

2) **The air venturi should be hartford loop adjacent to spa shell and air entry point can be located next to spa or remotely at equipment.**
3) **Fill spa with water and test the system for leaks.**

SAND BACK FILL:

1) **With water in spa, back-fill around spa perimeter with dry plaster sand and wet wash with hydraulic attachment to hose. Let set for one hour and hydraulic dry again. Be sure water level in spa is at the highest level. Any questions please call us. (888) 479-4677.**

NESPA ENTERPRISES INC.
2800 Richter Ave. Suite E
Oroville, CA 95966
Office: (888) 479-4677 Fax: (530) 534-9915
E-Mail: nespa@pacbell.net www.tiledspas.com

IN-GROUND INSTALLATION

ALL DIMENSIONS SUBJECT TO 1/4" TOLERANCES

SCALE: 1/2" = 1'-0"
DATE: 3/27/02
JOB : STANDARD INSTALL
DW #: SI-1, SI-2

NOTE:
Sump pump or gravity drain is required for removing water from vault

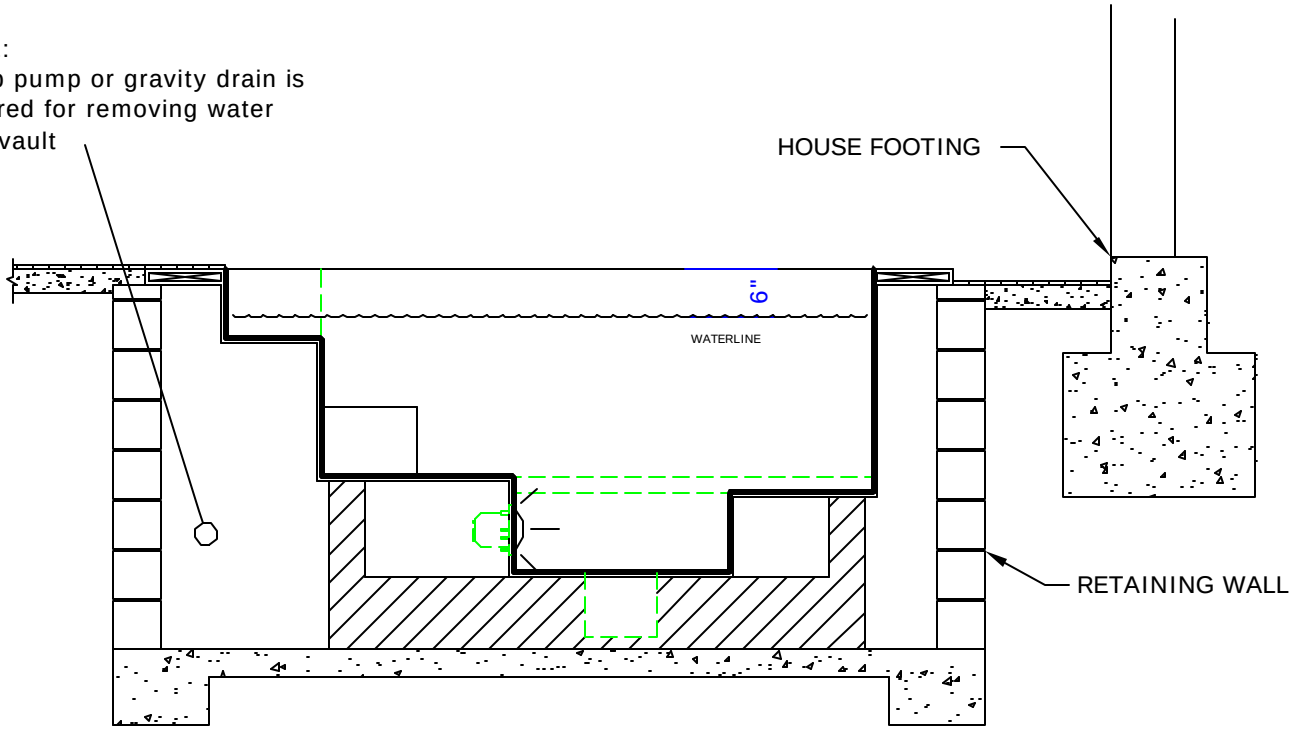

STANDARD VAULT INSTALLATION
SI-1

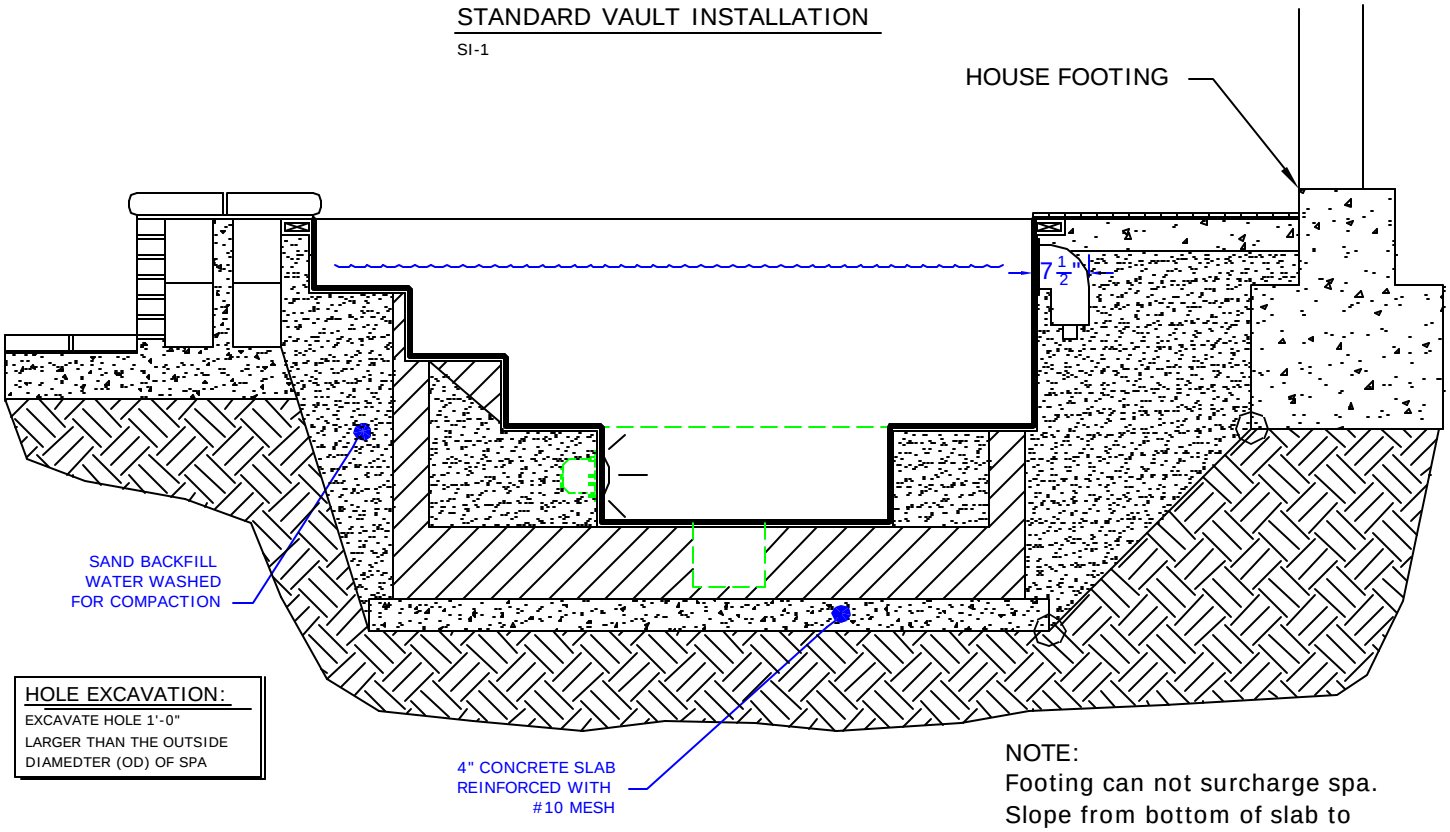

HOLE EXCAVATION:
EXCAVATE HOLE 1'-0" LARGER THAN THE OUTSIDE DIAMEDTER (OD) OF SPA

STANDARD INGROUND INSTALLATION
SI-2

NOTE:
Footing can not surcharge spa. Slope from bottom of slab to nearest corner of house footing must not exceed 1" = 1".

NESPA ENTERPRISES INC.
2800 Richter Ave. Suite E
Oroville, CA 95966
Office: (888) 479-4677 Fax: (530) 534-9915
E-Mail: nespa@pacbell.net http://nespa.net

LIGHT J-BOX

SECTION

ALL DIMENSIONS SUBJECT TO 1/4" TOLERANCES

SCALE: 3/4" = 1'-0"
DATE: 4/04/02
JOB :
INV #:

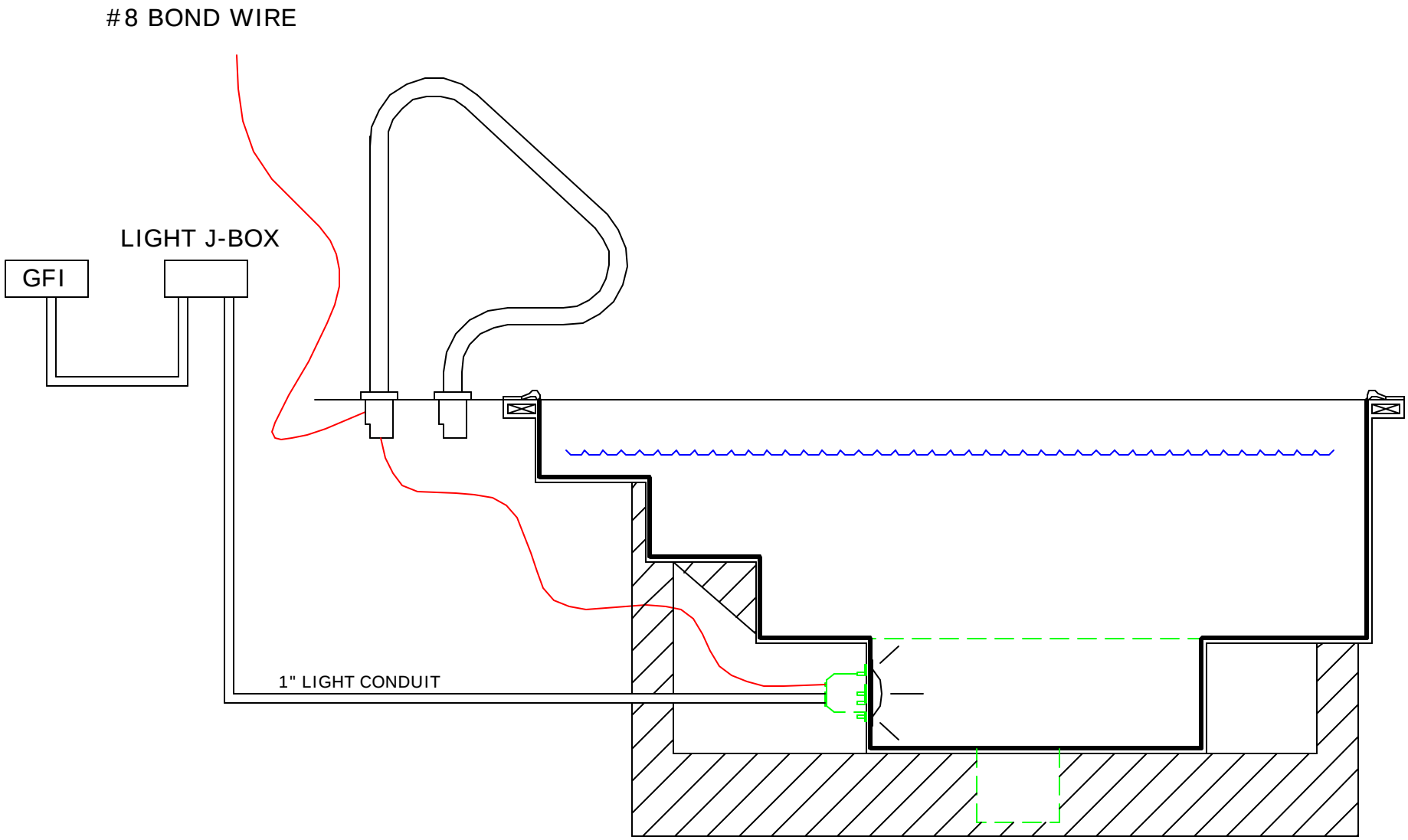

NESPA ENTERPRISES, Inc.
LIMITED WARRANTY

This LIMITED WARRANTY covering NESPA products is extended to the ORIGINAL PURCHASER-USER BY NESPA ENTERPRISES Inc. (NESPA), 2800 Richter Ave. Unit E California 95965.

NESPA products are thoroughly inspected and tested prior to factory shipment. NESPA warrants to the ORIGINAL PURCHASER-USER that NESPA Spas and Swim Spas will be free of defect in workmanship, accessories and parts, provided said accessories and parts were manufactured by NESPA. NESPA, under this LIMITED WARRANTY, warrants only that its Spas and Swim Spas shall be structurally sound, shall retain their shape, and shall retain water for the warranty period. NESPA warrants the adhesion of tile to fiberglass for a period of five (5) years and structural soundness for ten (10) years. NESPA warrants epoxy grout adhesion for a period of three years. If any such defects appear and are reported within the warranty period, NESPA shall repair or replace such defective parts without charge if an inspection proves the claim.

The provisions of the LIMITED WARRANTY shall not apply to tile cracked, split, chipped or damaged after the product has left the factory, nor damage to tile caused by freezing nor to damage, defect, malfunction or failure to conform with the above warranty provisions where the damage, defect, malfunction or failure to conform was caused during shipment or by distributor or by unreasonable use by ORIGINAL PURCHASER-USER including improper water balance and improper sand pack or support.

This LIMITED WARRANTY shall not apply to any plumbing, equipment, or installation of spas and Swim Spas and shall not apply to any alterations made to or upon NESPA products except alterations made by NESPA employees or NESPA authorized representatives.

This LIMITED WARRANTY is expressly in lieu of all other warranties expressed or implied including the warranties of merchantability and fitness for use and all other obligations or liabilities on NESPA'S part, and NESPA neither assumes nor authorizes any other person to assume for NESPA any other liability in connection with the sale of this NESPA product. This LIMITED WARRANTY shall not apply to this NESPA product or any part thereof, which has been subject to accident, negligence, alteration, abuse or misuse. NESPA makes no warranty whatsoever with respect to accessories or parts not manufactured by NESPA.

The term "ORIGINAL PURCHASER-USER" as used in this LIMITED WARRANTY shall be deemed to mean that person for whom the NESPA product is originally installed.

The LIMITED WARRANTY provided herein and the obligations and liabilities of NESPA hereunder are exclusive and are in lieu of, and buyer and original PURCHASE-USER hereby waive all other remedies, warranties, guarantees or liabilities, expressed or implied, arising by law or otherwise (including without limitation and obligations of NESPA with respect to fitness, merchantability, and consequential damages) or whether or not occasioned by NESPA'S negligence.

This LIMITED WARRANTY shall not be extended, altered or varied except by a written instrument signed by NESPA and original PURCHASER-USER.